Downloaded from Arrow.com.

REVISIONS					
REV	ECO	DESCRIPTION	DATE	BY	APPR
A3	-	RELEASE NEW DWG FORMAT	11DEC13	DRP	

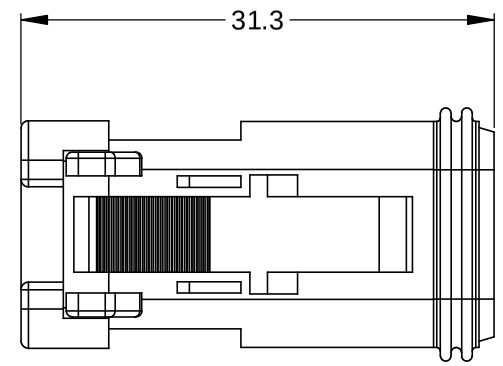

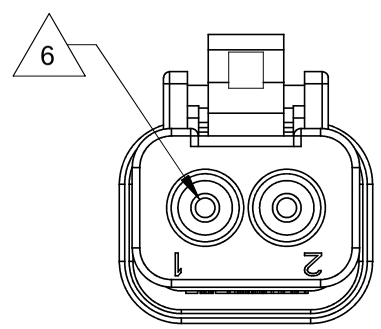

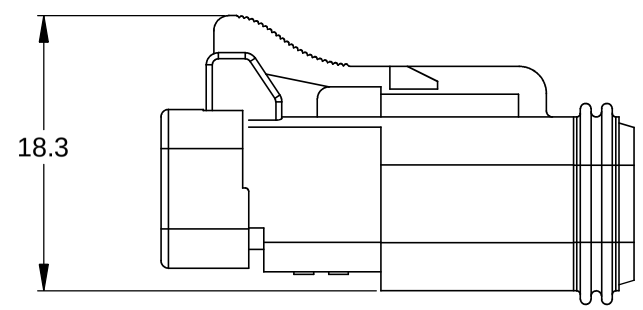

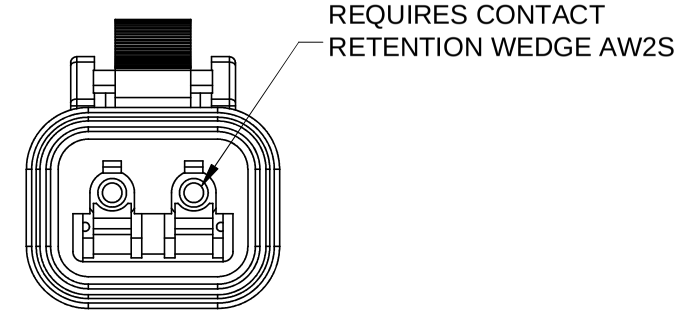

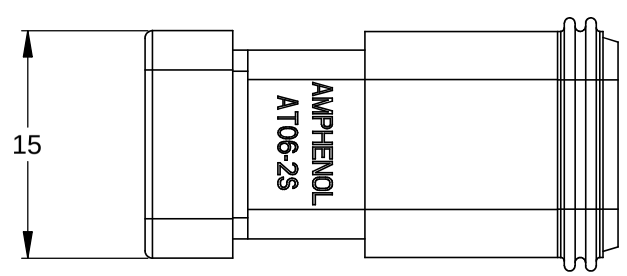

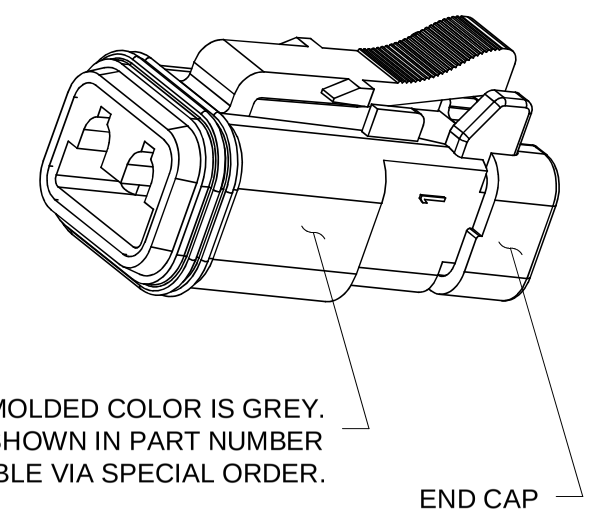

NOTES: UNLESS OTHERWISE SPECIFIED

1. MATERIAL:
   HOUSING: THERMOPLASTIC
   SEAL: SILICONE RUBBER

2. MODIFICATIONS: END CAP

3. SPECIFICATIONS:
   3.1 CURRENT RATING: 13 AMPS
   3.2 OPERATING TEMPERATURE: -55°C TO +125°C
   3.3 DIELECTRIC WITHSTANDING VOLTAGE: LESS THAN 2 MILLIAMPS CURRENT LEAKAGE @ 1500 VOLTS AC.
   3.4 INSULATION RESISTANCE: 1000 MEGOHMS MIN @ 25°C.
   3.5 MOISTURE RESISTANCE: IP67 (MATED CONDITION)
   3.6 MATING CYCLE DURABILITY: 100 CYCLES
   3.7 RoHS COMPLIANT

4. MATING PART: AT04-2P* RECEPTACLE
   (* = MODIFICATIONS AND COLORS)

5. ALL DIMENSIONS ARE FOR REFERENCE USE ONLY.

6 CONTACT SIZE AND REAR SEAL WIRE RANGE:

CONTACT SIZE	MIN. INSUL O.D.	MAX. INSUL O.D.	TYPICAL WIRE RANGE
16	2.24 mm (.088 in)	3.68 mm (.145 in)	14 - 20 AWG

PART NUMBER CHART	
COLOR	PART NUMBER
GREY	AT06-2S-EC01
BLACK	AT06-2S-EC01BLK
BLUE	AT06-2S-EC01BLU
BROWN	AT06-2S-EC01BRN
GREEN	AT06-2S-EC01GRN
RED	AT06-2S-EC01RED
WHITE	AT06-2S-EC01WHT
YELLOW	AT06-2S-EC01YEL

	SEE PART NUMBER CHART		
	PART NUMBER	DESCRIPTION	ITEM
QUANTITY	MATERIALS LIST		

UNLESS OTHERWISE SPECIFIED
1) All dimensions are in metric(mm).
2) Tolerances are as follows:
1 PL DEC ±0.30 | Fractions ±1/64
2 PL DEC ±0.15 | Angles ±1°
3 PL DEC ±0.08
3) Note reference = X

MATERIAL SPECIFICATIONS:

PROCESS SPECIFICATIONS:

NEXT ASS'Y:

SIGNATURES		DATE
DRAWN:	D.PARKS	11DEC13
CHECKED:		
ENGINEER:		
APPROVAL:		
CUSTOMER:		

THIS DRAWING IS SUPPLIED FOR INFORMATION ONLY. DESIGN FEATURES, SPECIFICATIONS AND PERFORMANCE DATA SHOWN HEREON ARE THE PROPERTY OF THE AMPHENOL CORPORATION. NO RIGHTS OF REPRODUCTION ARE IMPLIED. ALL DIMENSIONS ARE SUBJECT TO NORMAL MANUFACTURING VARIATIONS.

Amphenol
Sine Systems - www.amphenol-sine.com
44724 Morley Drive
Clinton Township, MI 48036

PLUG, 2 SOCKET, AT SERIES, END CAP

SIZE	TYPE	DWG NO:	REVISION
B	C-	AT06-2S-EC01XXX	A3

SCALE: NONE | SHEET 1 OF 1

TITLE: PLUG, 2 SOCKET, AT SERIES, END CAP
DWG NO: AT06-2S-EC01XXX
REV: A3
SH: 1
OF: 1