SAMZO | REAC/ROHS

REV	ECN NO	DESRIPTION	DESIGN	APPROVAL	DATE
A1	NEW	Replace frame			2023.09.03

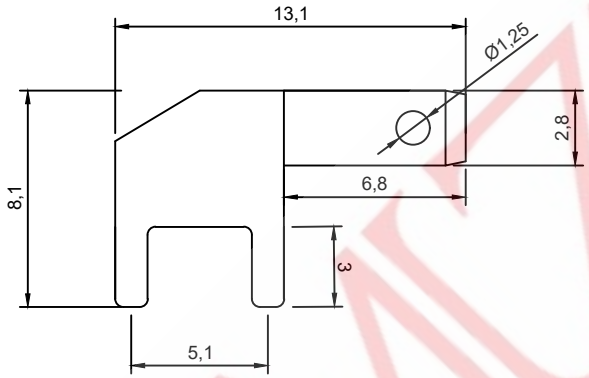

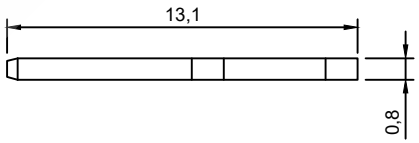

TERMINAL:
>MATERIAL:C2680
>THICKNESS:0.8mm
>BAG QTY:5000PCS
NOTE:
1. CURRENT RATING:10A MAX
2. VOLTAGE RANGE:220V AC.DC
3. TEMPERATURE RANGE:-20℃ TO 105℃

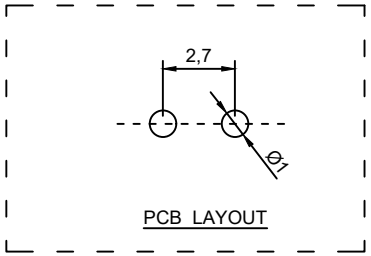

ITEM	DESCRIPTION	MATERIAL	QTY	FINSH/COLOR
A	主体	黄铜	1	镀亮锡

DESIGN	WANGGUIFA	2018.06.12	
CHECKED	ZHENGUILAN	2018.06.12	
APPROVED	LILIANJIANG	2018.06.14	

GENERAL TOLERANCE	
⩾0~2<	±0.15
⩾2~5<	±0.25
⩾0~2<	±0.15
⩾5	±0.35

FIRST VIEW

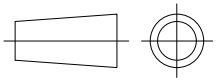

SCALE 1:1 UNIT mm

The copyright belongs to samzo parts [China] Co., Ltd. please use the material after samzo parts agree to authorize. The final right of interpretation belongs to samzo parts.
WWW.KKK-JP.COM

SAMZO COMPONENTS
Electronic switch and connector manufacturer

TITLE: 2.8*13.1*8.1 Ø1.25
DWG NO: G28-14H03
PART NO: G281025015
MODEL NO: G280-10-1H
NAME: GASKET