May.1.2017 Copyright 2017 HIROSE ELECTRIC CO., LTD. All Rights Reserved.

| | COUNT | DESCRIPTION OF REVISIONS | BY | CHKD | DATE | | COUNT | DESCRIPTION OF REVISIONS | BY | CHKD | DATE |
|---|---|---|---|---|---|---|---|---|---|---|---|
| △ | | | | | . . | △ | | | | | . . |
| △ | | | | | . . | △ | | | | | . . |
| △ | | | | | . . | △ | | | | | . . |

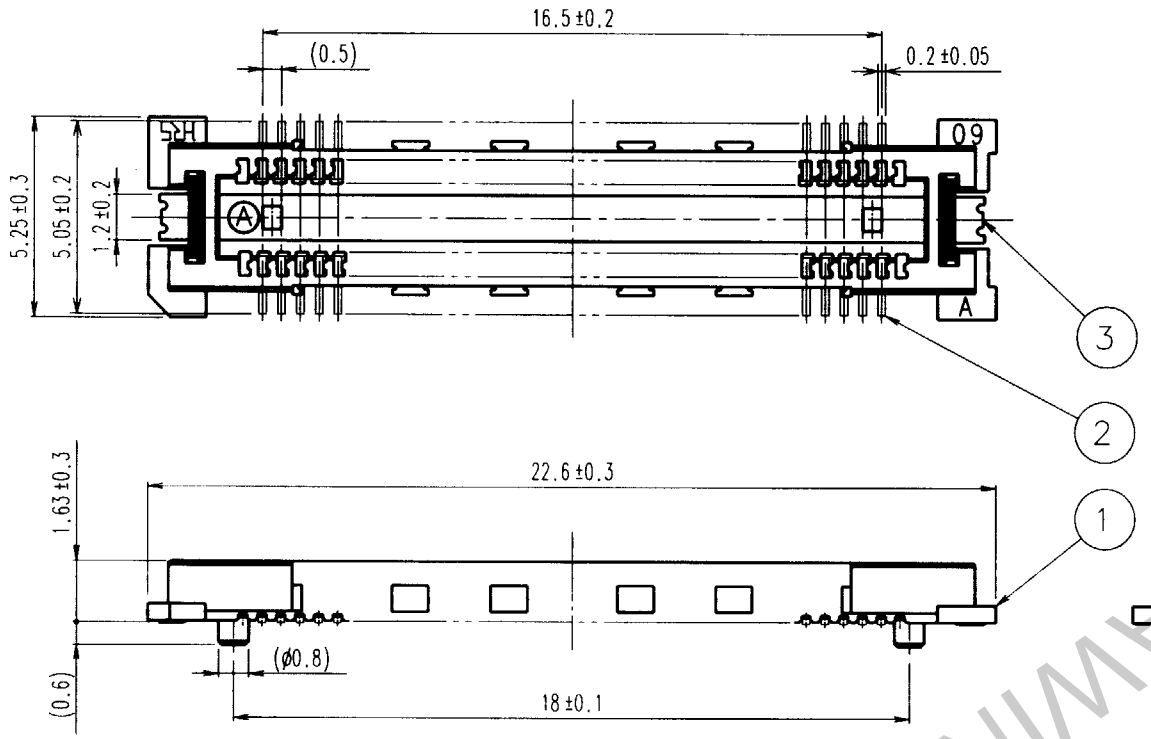


RECOMMENDED LAND PATTERN DIMENSION OF PCB

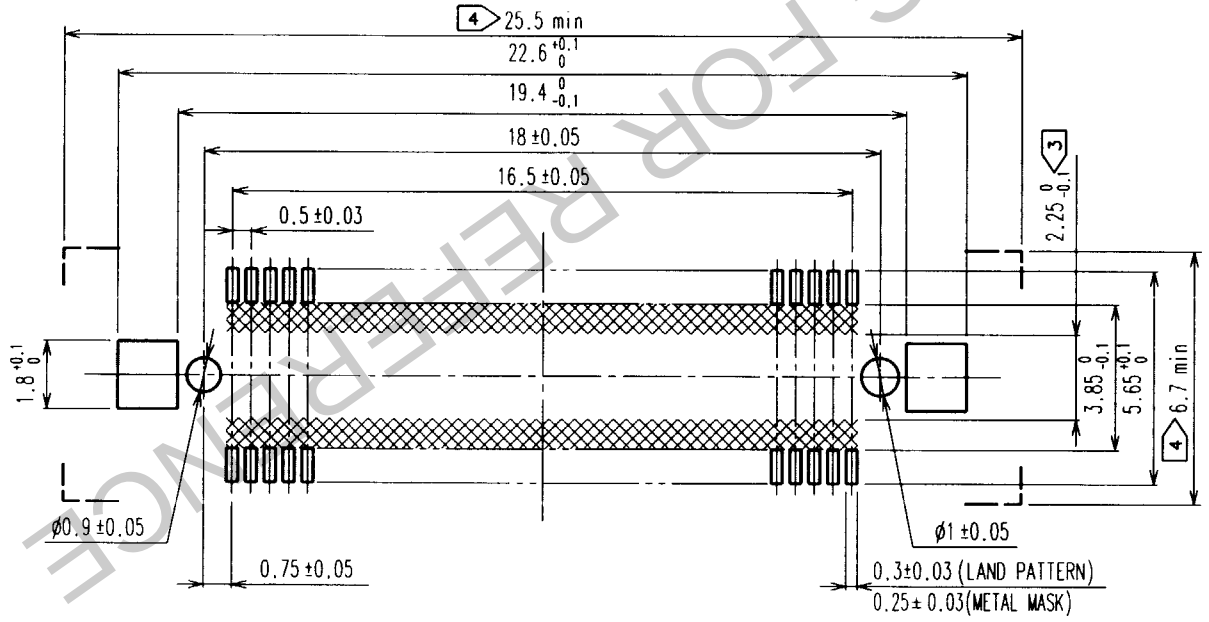


SIGNAL PORTION CROSS SECTION (10 : 1)

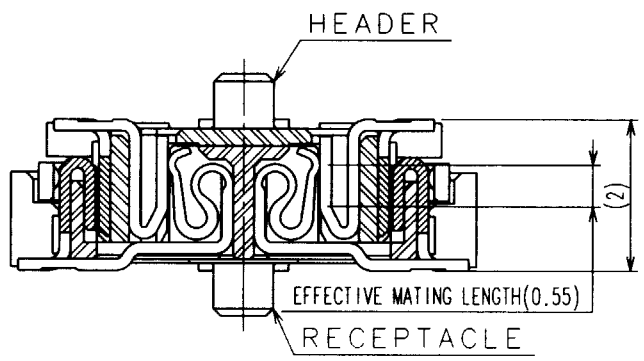


HRS DRAWING FOR REFERENCE

NOTES
1. SMT LEAD-COPLANARITY:0.1 MAX.
2. THIS PRODUCT HAS NO POLARITY TO PATTERN FOR MOUNTING.
3. MAKE SURE WIDTH OF PATTERN IS WITHIN THAT OF LAND ,OR LEAD MAY TOUCH PATTERN. (THIS APPLIES TO HATCHED ▩ AREA.)
4. DO NOT MOUNT OTHER DEVICES ONTO [ ] AREA ,OR MATING PAIR CANNOT BE MATED.
5. TO BE EMBOSSED CARRIER TAPED AS SPECIFIED IN SHEET 2.

| NO. | MATERIAL | FINISH, REMARKS | NO. | MATERIAL | FINISH, REMARKS |
|---|---|---|---|---|---|
| 2 | COPPER ALLOY | CONTACT AREA:GOLD(0.1μm) OVER NICKEL<br>LEAD:GOLD FLASH OVER NICKEL | | | |
| 1 | LCP | BEIGE UL94V-0 | 3 | PHOSPHOR BRONZE | TIN PLATED |

| CODE NO. (OLD) | DRAWN | DESIGNED | CHECKED | APPROVED | RELEASED |
|---|---|---|---|---|---|
| CL | K.Matsukawa 99.10.25 | K.Matsukawa 99.10.25 | M. Ishida 99.10.26 | J. Yoshimura 99.10.26 | |

| | | |
|---|---|---|
| SCALE 5 : 1 | DRAWING NO. EDC3-152100-01 | PART NO. FX11LA-68P-SV (21) |
| UNITS mm | HRS HIROSE ELECTRIC CO.,LTD. | CODE NO. CL573-0042-1-21 1/2 |

| TO |
|---|
| PCK |
| |
| |

FORM NO.229

May.1.2017 Copyright 2017 HIROSE ELECTRIC CO., LTD. All Rights Reserved.

| | COUNT | DESCRIPTION OF REVISIONS | BY | CHKD | DATE | | COUNT | DESCRIPTION OF REVISIONS | BY | CHKD | DATE |
|---|---|---|---|---|---|---|---|---|---|---|---|
| △ | | | | | . . | △ | | | | | . . |
| △ | | | | | . . | △ | | | | | . . |
| △ | | | | | . . | △ | | | | | . . |

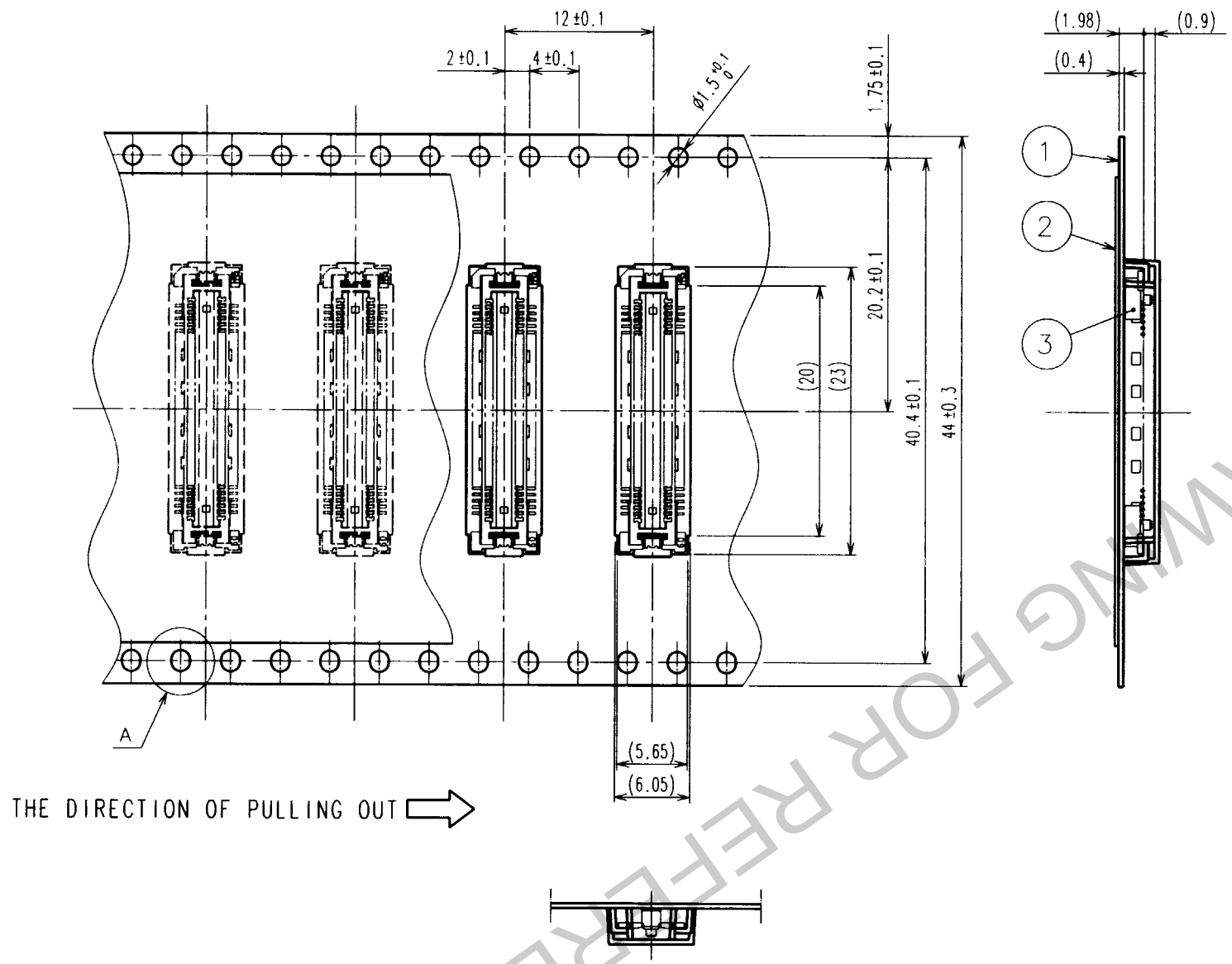


REELED DIMENSION (Free)

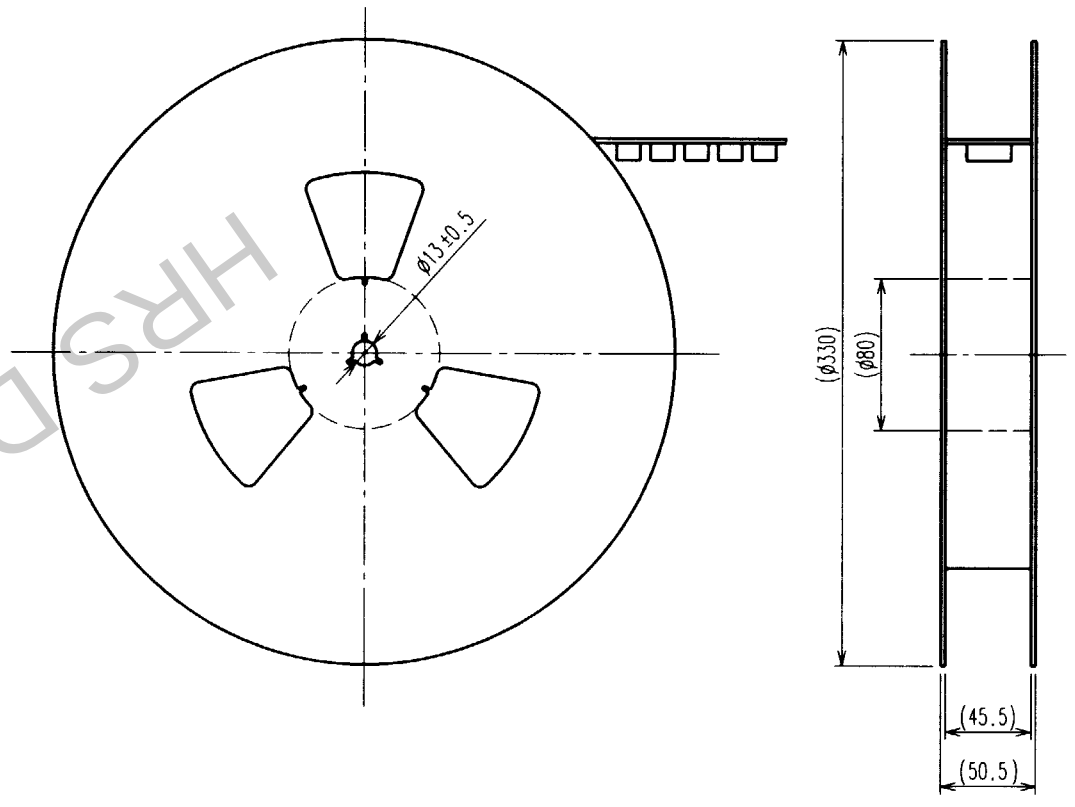


A (5 : 1)

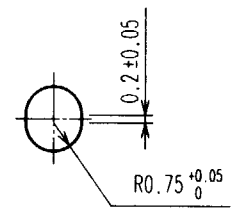


NOTES 1 1REEL:1000 CONNECTORS.
2 MINIMUM 10 COMPARTMENTS FROM BOTH REEL ENDS REMAIN EMPTY.
3 THIS PRODUCT HAS NO POLAVITY TO TAPE AND REEL PACKAGING.

| NO. | MATERIAL | FINISH, REMARKS | NO. | MATERIAL | FINISH, REMARKS |
|---|---|---|---|---|---|
| 2 | PET | TOP COVER TAPE | | | |
| 1 | PS | EMBOSSED CARRIER TAPE | 3 | (CONNECTOR) | |

| CODE NO.(OLD) | DRAWN | DESIGNED | CHECKED | APPROVED | RELEASED |
|---|---|---|---|---|---|
| CL | | | | | |
| DRAWING FOR PACKING | M.Matsukawa 99.10.25 | M.Matsukawa 99.10.25 | M. Ishida 99.10.26 | Y.Yoshimura 99.10.26 | . . |

| | | |
|---|---|---|
| SCALE 2 : 1 | DRAWING NO. EDC3-152100-01 | PART NO. FX11LA-68P-SV(21) |
| UNITS mm | HRS HIROSE ELECTRIC CO., LTD | CODE NO. CL573-0042-1-21 |

2/

| TO |
|---|
| PCK |
| |
| |
| |

HRS DRAWING FOR REFERENCE