220929 & 220930 SERIES RIGHT ANGLE WITH PULL TAB TYPE

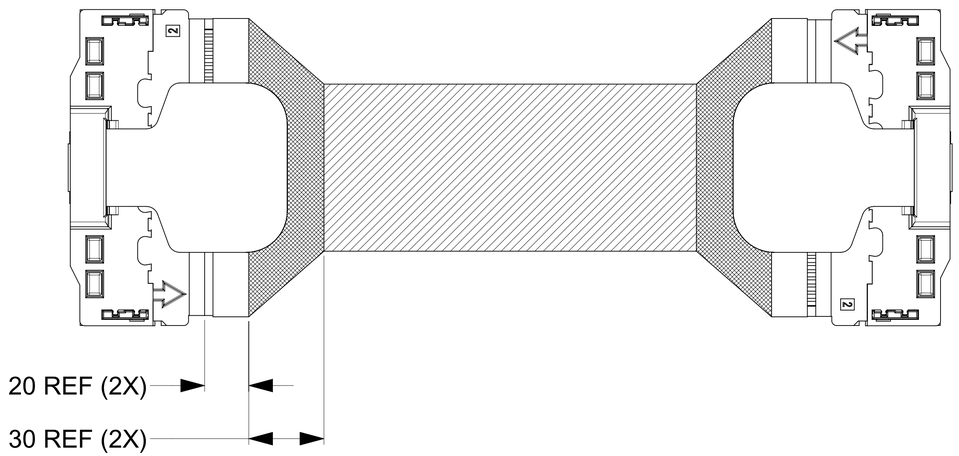

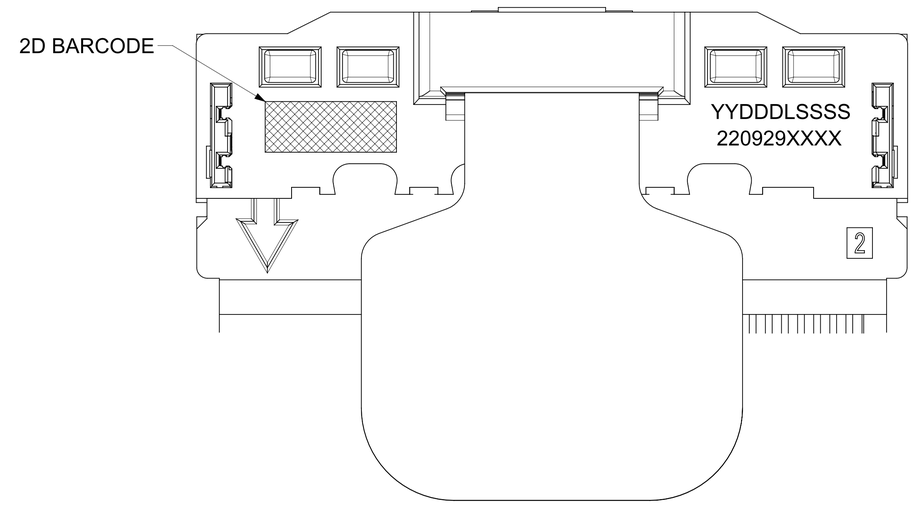

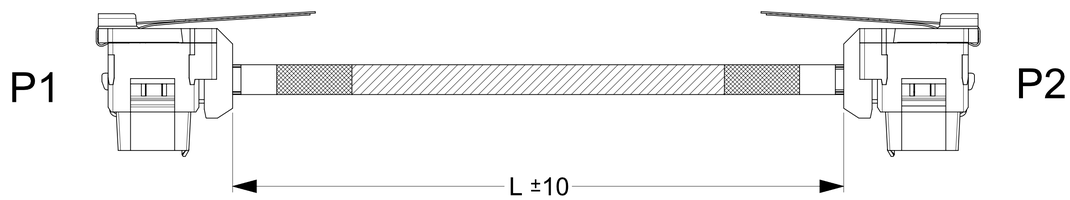

FORMAT: YY=YEAR DDD=JULIAN DATE
SSSS=SERIAL NO. FROM 0000-9999 AND WILL RESET EVERYDAY
L=PRODUCTION LINE CODE
220929XXXX IS THE PART NUMBER OF THE CABLE
ALL THE 2D BARCODE PN AND SN ARE PRINTED ON BOTH P1 AND P2 END
THIS FORMAT APPLIES TO ALL THE SERIES# CALLED OUT ON THIS DRAWING

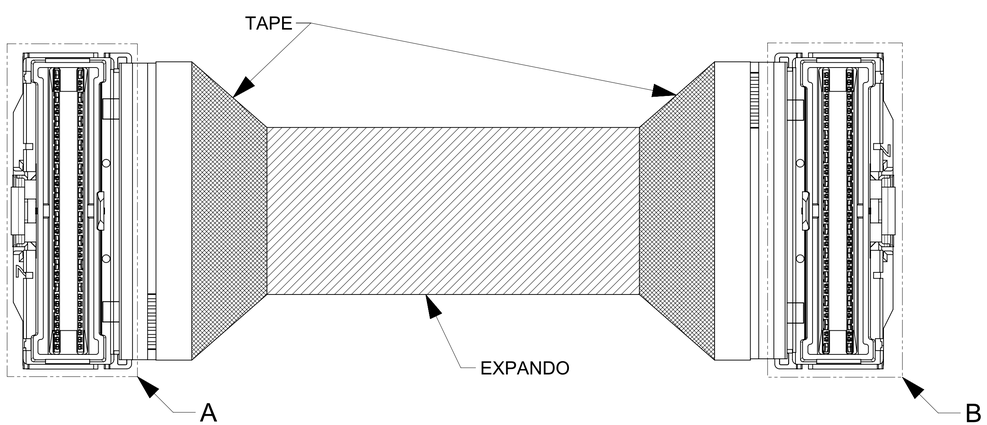

NOTES:
1. PRODUCT SPECIFICATION: 2080210001-PS
2. APPLICATION SPECIFICATION: 2080210001-AS
3. COSMETIC SPECIFICATION: PS-45499-002 CLASS B
4. MATES WITH: 2080211000 & 2080211100
5. HOUSING MATERIAL: LCP, GLASS FILLED, UL94V-0, COLOR: BLACK
6. CONTACT MATERIAL: HIGH PERFORMANCE COPPER ALLOY
7. PLATING: 0.76 MICRONS MIN. GOLD OVER NICKEL
(SELECTED GOLD IN CONTACT AREA)

THIS DRAWING CONTAINS INFORMATION THAT IS PROPRIETARY TO MOLEX ELECTRONIC TECHNOLOGIES, LLC AND SHOULD NOT BE USED WITHOUT WRITTEN PERMISSION

FUNCTIONAL SYMBOLS	DIMENSION UNITS: MM	SCALE: 4:1	CURRENT REV DESC: Change Dust Cover
FA = 0	GENERAL TOLERANCES (UNLESS SPECIFIED)		
FC = 0	ANGULAR TOL ± 0.5°		
FP = 0	4 PLACES ±		
DIVISIONAL SYMBOLS	3 PLACES ±		
	2 PLACES ±		STATUS: Design Approved
	1 PLACE ±		DRWN: Jia Ling Fan 2024-03-04
	0 PLACES ±		CHK'D: Tony Tong 2024-03-15
	DRAFT WHERE APPLICABLE MUST REMAIN WITHIN DIMENSIONS		APPR: Benny (Xing Qiang) He 2024-03-15

molex

GENERAL MARKET NS PCIE CABLE

PRODUCT SALES DRAWING

DOCUMENT NUMBER	DOC TYPE	DOC PART	REVISION
2209291000	PSD	000	A3

THIRD ANGLE PROJECTION	DRAWING	SERIES	MATERIAL NUMBER	CUSTOMER	SHEET NUMBER
	D-SIZE	220929	SEE TABLE		1 OF 10

P1		P2	
CKT		CKT	
1	GND	45	GND
2	S	46	S
3	S	47	S
4	GND	48	GND
5	S	49	S
6	S	50	S
7	GND	51	GND
8	S	52	S
9	S	53	S
10	GND	54	GND
11	S	55	S
12	S	56	S
13	GND	57	GND
14	S	58	S
15	S	59	S
16	GND	60	GND
17	S	61	S
18	S	62	S
19	GND	63	GND
20	S	64	S
21	S	65	S
22	GND	66	GND
23	S	67	S
24	S	68	S
25	GND	69	GND
26	S	70	S
27	S	71	S
28	GND	72	GND
29	SE	37	SE
30	SE	38	SE
31	SE	39	SE
32	SE	40	SE
33	SE	41	SE
34	SE	42	SE
35	SE	43	SE
36	SE	44	SE

P1		P2	
CKT		CKT	
37	SE	29	SE
38	SE	30	SE
39	SE	31	SE
40	SE	32	SE
41	SE	33	SE
42	SE	34	SE
43	SE	35	SE
44	SE	36	SE
45	GND	1	GND
46	S	2	S
47	S	3	S
48	GND	4	GND
49	S	5	S
50	S	6	S
51	GND	7	GND
52	S	8	S
53	S	9	S
54	GND	10	GND
55	S	11	S
56	S	12	S
57	GND	13	GND
58	S	14	S
59	S	15	S
60	GND	16	GND
61	S	17	S
62	S	18	S
63	GND	19	GND
64	S	20	S
65	S	21	S
66	GND	22	GND
67	S	23	S
68	S	24	S
69	GND	25	GND
70	S	26	S
71	S	27	S
72	GND	28	GND

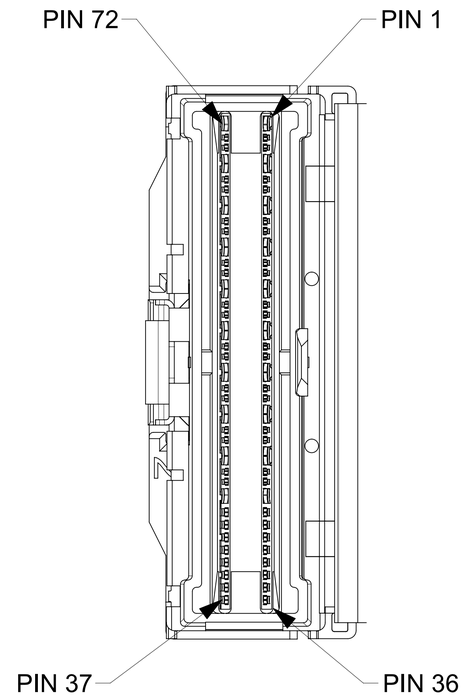

DETAIL A
SCALE 7:1

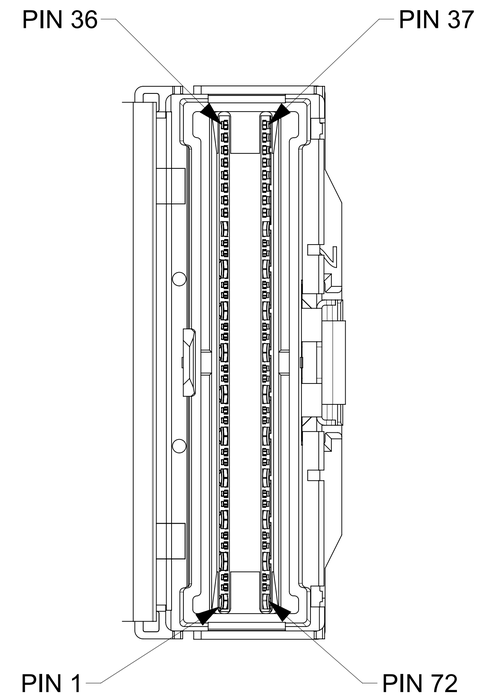

DETAIL B
SCALE 7:1

NOTE:

THIS PINOUT IS APPLICABLE FOR ALL THE SERIES LISTED BELOW:
220929 220930
220931 220932
220933 220934
220935 220936

THIS DRAWING CONTAINS INFORMATION THAT IS PROPRIETARY TO MOLEX ELECTRONIC TECHNOLOGIES, LLC AND SHOULD NOT BE USED WITHOUT WRITTEN PERMISSION

FUNCTIONAL SYMBOLS
FA = 0
FC = 0
FP = 0

DIVISIONAL SYMBOLS

DIMENSION UNITS: MM
SCALE: 1:1

GENERAL TOLERANCES (UNLESS SPECIFIED)
ANGULAR TOL ± 0.5°
4 PLACES ±
3 PLACES ±
2 PLACES ±
1 PLACE ±
0 PLACES ±

DRAFT WHERE APPLICABLE MUST REMAIN WITHIN DIMENSIONS

CURRENT REV DESC: Change Dust Cover

STATUS: Design Approved
DRWN: Jia Ling Fan 2024-03-04
CHK'D: Tony Tong 2024-03-15
APPR: Benny (Xing Qiang) He 2024-03-15

THIRD ANGLE PROJECTION
DRAWING: D-SIZE
SERIES: 220929

molex

GENERAL MARKET NS PCIE CABLE

PRODUCT SALES DRAWING

DOCUMENT NUMBER	DOC TYPE	DOC PART	REVISION
2209291000	PSD	000	A3

MATERIAL NUMBER: SEE TABLE
CUSTOMER:
SHEET NUMBER: 2 OF 10

FORMAT: TLDraftA3
REVISION: B
DATE: 2022/08/01

220929 SERIES WITHOUT EXPANDO AND TAPE
220930 SERIES WITH EXPANDO AND TAPE

FINISHED GOODS PN	DESCRIPTION	DIMENSION "L"
2209290250	RA PT DONOR 250MM	250
2209290275	RA PT DONOR 275MM	275
2209290300	RA PT DONOR 300MM	300
2209290325	RA PT DONOR 325MM	325
2209290350	RA PT DONOR 350MM	350
2209290375	RA PT DONOR 375MM	375
2209290400	RA PT DONOR 400MM	400
2209290425	RA PT DONOR 425MM	425
2209290450	RA PT DONOR 450MM	450
2209290475	RA PT DONOR 475MM	475
2209290500	RA PT DONOR 500MM	500
2209290525	RA PT DONOR 525MM	525
2209290550	RA PT DONOR 550MM	550
2209290575	RA PT DONOR 575MM	575
2209290600	RA PT DONOR 600MM	600
2209290625	RA PT DONOR 625MM	625
2209290650	RA PT DONOR 650MM	650
2209290675	RA PT DONOR 675MM	675
2209290700	RA PT DONOR 700MM	700
2209290725	RA PT DONOR 725MM	725
2209290750	RA PT DONOR 750MM	750
2209290775	RA PT DONOR 775MM	775
2209290800	RA PT DONOR 800MM	800
2209290825	RA PT DONOR 825MM	825
2209290850	RA PT DONOR 850MM	850
2209290875	RA PT DONOR 875MM	875
2209290900	RA PT DONOR 900MM	900
2209290925	RA PT DONOR 925MM	925
2209290950	RA PT DONOR 950MM	950
2209290975	RA PT DONOR 975MM	975
2209291000	RA PT DONOR 1000MM	1000
2209291025	RA PT DONOR 1025MM	1025
2209291050	RA PT DONOR 1050MM	1050
2209291075	RA PT DONOR 1075MM	1075
2209291100	RA PT DONOR 1100MM	1100
2209291125	RA PT DONOR 1125MM	1125
2209291150	RA PT DONOR 1150MM	1150
2209291175	RA PT DONOR 1175MM	1175
2209291200	RA PT DONOR 1200MM	1200
2209291225	RA PT DONOR 1225MM	1225
2209291250	RA PT DONOR 1250MM	1250
2209291275	RA PT DONOR 1275MM	1275
2209291300	RA PT DONOR 1300MM	1300
2209291325	RA PT DONOR 1325MM	1325
2209291350	RA PT DONOR 1350MM	1350
2209291375	RA PT DONOR 1375MM	1375
2209291400	RA PT DONOR 1400MM	1400
2209291425	RA PT DONOR 1425MM	1425
2209291450	RA PT DONOR 1450MM	1450
2209291475	RA PT DONOR 1475MM	1475
2209291500	RA PT DONOR 1500MM	1500
2209291550	RA PT DONOR 1550MM	1550
2209291600	RA PT DONOR 1600MM	1600

FINISHED GOODS PN	DESCRIPTION	DIMENSION "L"
2209300250	RA PT FG 250MM	250
2209300275	RA PT FG 275MM	275
2209300300	RA PT FG 300MM	300
2209300325	RA PT FG 325MM	325
2209300350	RA PT FG 350MM	350
2209300375	RA PT FG 375MM	375
2209300400	RA PT FG 400MM	400
2209300425	RA PT FG 425MM	425
2209300450	RA PT FG 450MM	450
2209300475	RA PT FG 475MM	475
2209300500	RA PT FG 500MM	500
2209300525	RA PT FG 525MM	525
2209300550	RA PT FG 550MM	550
2209300575	RA PT FG 575MM	575
2209300600	RA PT FG 600MM	600
2209300625	RA PT FG 625MM	625
2209300650	RA PT FG 650MM	650
2209300675	RA PT FG 675MM	675
2209300700	RA PT FG 700MM	700
2209300725	RA PT FG 725MM	725
2209300750	RA PT FG 750MM	750
2209300775	RA PT FG 775MM	775
2209300800	RA PT FG 800MM	800
2209300825	RA PT FG 825MM	825
2209300850	RA PT FG 850MM	850
2209300875	RA PT FG 875MM	875
2209300900	RA PT FG 900MM	900
2209300925	RA PT FG 925MM	925
2209300950	RA PT FG 950MM	950
2209300975	RA PT FG 975MM	975
2209301000	RA PT FG 1000MM	1000
2209301025	RA PT FG 1025MM	1025
2209301050	RA PT FG 1050MM	1050
2209301075	RA PT FG 1075MM	1075
2209301100	RA PT FG 1100MM	1100
2209301125	RA PT FG 1125MM	1125
2209301150	RA PT FG 1150MM	1150
2209301175	RA PT FG 1175MM	1175
2209301200	RA PT FG 1200MM	1200
2209301225	RA PT FG 1225MM	1225
2209301250	RA PT FG 1250MM	1250
2209301275	RA PT FG 1275MM	1275
2209301300	RA PT FG 1300MM	1300
2209301325	RA PT FG 1325MM	1325
2209301350	RA PT FG 1350MM	1350
2209301375	RA PT FG 1375MM	1375
2209301400	RA PT FG 1400MM	1400
2209301425	RA PT FG 1425MM	1425
2209301450	RA PT FG 1450MM	1450
2209301475	RA PT FG 1475MM	1475
2209301500	RA PT FG 1500MM	1500
2209301550	RA PT FG 1550MM	1550
2209301600	RA PT FG 1600MM	1600

FINISHED GOODS PN	DESCRIPTION	DIMENSION "L"
2209291650	RA PT DONOR 1650MM	1650
2209291700	RA PT DONOR 1700MM	1700
2209291750	RA PT DONOR 1750MM	1750
2209291800	RA PT DONOR 1800MM	1800
2209291850	RA PT DONOR 1850MM	1850
2209291925	RA PT DONOR 1925MM	1925
2209292000	RA PT DONOR 2000MM	2000
2209292050	RA PT DONOR 2050MM	2050

FINISHED GOODS PN	DESCRIPTION	DIMENSION "L"
2209301650	RA PT FG 1650MM	1650
2209301700	RA PT FG 1700MM	1700
2209301750	RA PT FG 1750MM	1750
2209301800	RA PT FG 1800MM	1800
2209301850	RA PT FG 1850MM	1850
2209301925	RA PT FG 1925MM	1925
2209302000	RA PT FG 2000MM	2000
2209302050	RA PT FG 2050MM	2050

THIS DRAWING CONTAINS INFORMATION THAT IS PROPRIETARY TO MOLEX ELECTRONIC TECHNOLOGIES, LLC AND SHOULD NOT BE USED WITHOUT WRITTEN PERMISSION

FUNCTIONAL SYMBOLS
FA = 0
FC = 0
FD = 0

DIVISIONAL SYMBOLS

DIMENSION UNITS: MM
SCALE: 1:1

GENERAL TOLERANCES (UNLESS SPECIFIED)

ANGULAR TOL	±	0.5°
4 PLACES	±	
3 PLACES	±	
2 PLACES	±	
1 PLACE	±	
0 PLACES	±	

DRAFT WHERE APPLICABLE MUST REMAIN WITHIN DIMENSIONS

CURRENT REV DESC: Change Dust Cover

STATUS: Design Approved
DRWN: Jia Ling Fan 2024-03-04
CHK'D: Tony Tong 2024-03-15
APPR: Benny (Xing Qiang) He 2024-03-15

molex

GENERAL MARKET NS PCIE CABLE

PRODUCT SALES DRAWING

DOCUMENT NUMBER	DOC TYPE	DOC PART	REVISION
2209291000	PSD	000	A3

THIRD ANGLE PROJECTION	DRAWING	SERIES	MATERIAL NUMBER	CUSTOMER	SHEET NUMBER
	D-SIZE	220929	SEE TABLE		3 OF 10

FORMAT TC-dwgnrd-D
REV: 2024-02-01
DATE: 2024-04-01

220931 & 220932 SERIES RIGHT ANGLE WITH THUMB LATCH TYPE

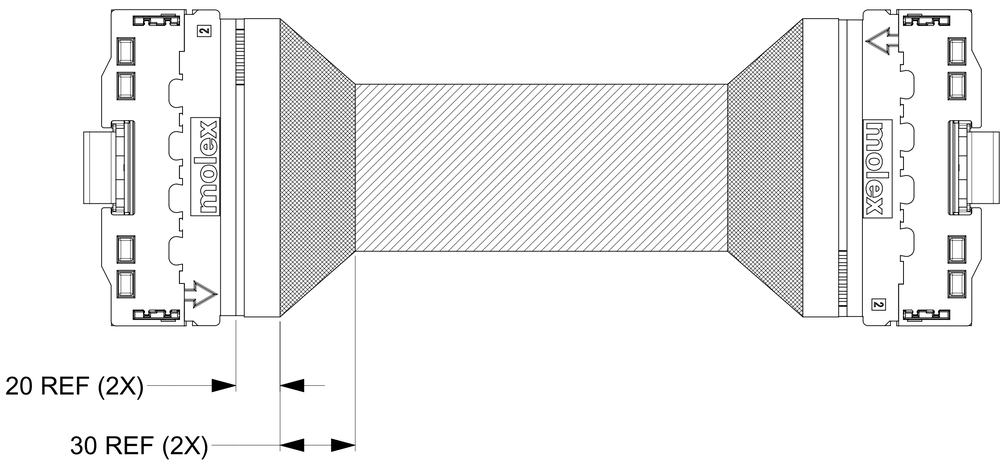

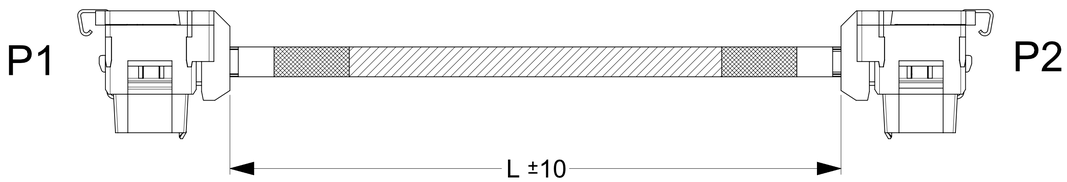

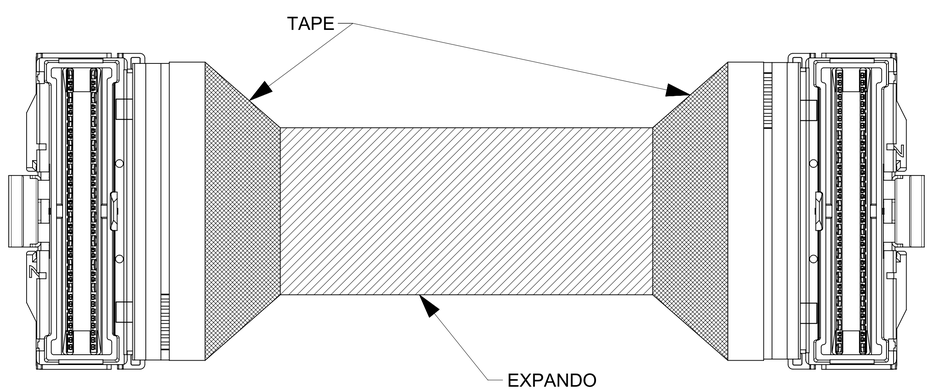

NOTE:

SEE SHEET 2 FOR PINOUT INFORMATION.

THIS DRAWING CONTAINS INFORMATION THAT IS PROPRIETARY TO MOLEX ELECTRONIC TECHNOLOGIES, LLC AND SHOULD NOT BE USED WITHOUT WRITTEN PERMISSION

FUNCTIONAL SYMBOLS	DIMENSION UNITS: MM	SCALE: 4:1	CURRENT REV DESC: Change Dust Cover
FA = 0	GENERAL TOLERANCES (UNLESS SPECIFIED)		
FC = 0	ANGULAR TOL ± 0.5°		
FP = 0	4 PLACES ±		
DIVISIONAL SYMBOLS	3 PLACES ±		
	2 PLACES ±		
	1 PLACE ±		
	0 PLACES ±		
	DRAFT WHERE APPLICABLE MUST REMAIN WITHIN DIMENSIONS		

STATUS: Design Approved
DRWN: Jia Ling Fan 2024-03-04
CHK'D: Tony Tong 2024-03-15
APPR: Benny (Xing Qiang) He 2024-03-15

THIRD ANGLE PROJECTION | DRAWING: D-SIZE | SERIES: 220929

molex

GENERAL MARKET NS PCIE CABLE

PRODUCT SALES DRAWING

DOCUMENT NUMBER	DOC TYPE	DOC PART	REVISION
2209291000	PSD	000	A3

MATERIAL NUMBER	CUSTOMER	SHEET NUMBER
SEE TABLE		4 OF 10

FORMAT: TC-Portrait-D2
REVISION: B
DATE: 2022/08/01

220931 SERIES WITHOUT EXPANDO AND TAPE
220932 SERIES WITH EXPANDO AND TAPE

FINISHED GOODS PN	DESCRIPTION	DIMENSION "L"
2209310250	RA TL DONOR 250MM	250
2209310275	RA TL DONOR 275MM	275
2209310300	RA TL DONOR 300MM	300
2209310325	RA TL DONOR 325MM	325
2209310350	RA TL DONOR 350MM	350
2209310375	RA TL DONOR 375MM	375
2209310400	RA TL DONOR 400MM	400
2209310425	RA TL DONOR 425MM	425
2209310450	RA TL DONOR 450MM	450
2209310475	RA TL DONOR 475MM	475
2209310500	RA TL DONOR 500MM	500
2209310525	RA TL DONOR 525MM	525
2209310550	RA TL DONOR 550MM	550
2209310575	RA TL DONOR 575MM	575
2209310600	RA TL DONOR 600MM	600
2209310625	RA TL DONOR 625MM	625
2209310650	RA TL DONOR 650MM	650
2209310675	RA TL DONOR 675MM	675
2209310700	RA TL DONOR 700MM	700
2209310725	RA TL DONOR 725MM	725
2209310750	RA TL DONOR 750MM	750
2209310775	RA TL DONOR 775MM	775
2209310800	RA TL DONOR 800MM	800
2209310825	RA TL DONOR 825MM	825
2209310850	RA TL DONOR 850MM	850
2209310875	RA TL DONOR 875MM	875
2209310900	RA TL DONOR 900MM	900
2209310925	RA TL DONOR 925MM	925
2209310950	RA TL DONOR 950MM	950
2209310975	RA TL DONOR 975MM	975
2209311000	RA TL DONOR 1000MM	1000
2209311025	RA TL DONOR 1025MM	1025
2209311050	RA TL DONOR 1050MM	1050
2209311075	RA TL DONOR 1075MM	1075
2209311100	RA TL DONOR 1100MM	1100
2209311125	RA TL DONOR 1125MM	1125
2209311150	RA TL DONOR 1150MM	1150
2209311175	RA TL DONOR 1175MM	1175
2209311200	RA TL DONOR 1200MM	1200
2209311225	RA TL DONOR 1225MM	1225
2209311250	RA TL DONOR 1250MM	1250
2209311275	RA TL DONOR 1275MM	1275
2209311300	RA TL DONOR 1300MM	1300
2209311325	RA TL DONOR 1325MM	1325
2209311350	RA TL DONOR 1350MM	1350
2209311375	RA TL DONOR 1375MM	1375
2209311400	RA TL DONOR 1400MM	1400
2209311425	RA TL DONOR 1425MM	1425
2209311450	RA TL DONOR 1450MM	1450
2209311475	RA TL DONOR 1475MM	1475
2209311500	RA TL DONOR 1500MM	1500
2209311550	RA TL DONOR 1550MM	1550
2209311600	RA TL DONOR 1600MM	1600

FINISHED GOODS PN	DESCRIPTION	DIMENSION "L"
2209320250	RA TL FG 250MM	250
2209320275	RA TL FG 275MM	275
2209320300	RA TL FG 300MM	300
2209320325	RA TL FG 325MM	325
2209320350	RA TL FG 350MM	350
2209320375	RA TL FG 375MM	375
2209320400	RA TL FG 400MM	400
2209320425	RA TL FG 425MM	425
2209320450	RA TL FG 450MM	450
2209320475	RA TL FG 475MM	475
2209320500	RA TL FG 500MM	500
2209320525	RA TL FG 525MM	525
2209320550	RA TL FG 550MM	550
2209320575	RA TL FG 575MM	575
2209320600	RA TL FG 600MM	600
2209320625	RA TL FG 625MM	625
2209320650	RA TL FG 650MM	650
2209320675	RA TL FG 675MM	675
2209320700	RA TL FG 700MM	700
2209320725	RA TL FG 725MM	725
2209320750	RA TL FG 750MM	750
2209320775	RA TL FG 775MM	775
2209320800	RA TL FG 800MM	800
2209320825	RA TL FG 825MM	825
2209320850	RA TL FG 850MM	850
2209320875	RA TL FG 875MM	875
2209320900	RA TL FG 900MM	900
2209320925	RA TL FG 925MM	925
2209320950	RA TL FG 950MM	950
2209320975	RA TL FG 975MM	975
2209321000	RA TL FG 1000MM	1000
2209321025	RA TL FG 1025MM	1025
2209321050	RA TL FG 1050MM	1050
2209321075	RA TL FG 1075MM	1075
2209321100	RA TL FG 1100MM	1100
2209321125	RA TL FG 1125MM	1125
2209321150	RA TL FG 1150MM	1150
2209321175	RA TL FG 1175MM	1175
2209321200	RA TL FG 1200MM	1200
2209321225	RA TL FG 1225MM	1225
2209321250	RA TL FG 1250MM	1250
2209321275	RA TL FG 1275MM	1275
2209321300	RA TL FG 1300MM	1300
2209321325	RA TL FG 1325MM	1325
2209321350	RA TL FG 1350MM	1350
2209321375	RA TL FG 1375MM	1375
2209321400	RA TL FG 1400MM	1400
2209321425	RA TL FG 1425MM	1425
2209321450	RA TL FG 1450MM	1450
2209321475	RA TL FG 1475MM	1475
2209321500	RA TL FG 1500MM	1500
2209321550	RA TL FG 1550MM	1550
2209321600	RA TL FG 1600MM	1600

FINISHED GOODS PN	DESCRIPTION	DIMENSION "L"
2209311650	RA TL DONOR 1650MM	1650
2209311700	RA TL DONOR 1700MM	1700
2209311750	RA TL DONOR 1750MM	1750
2209311800	RA TL DONOR 1800MM	1800
2209311850	RA TL DONOR 1850MM	1850
2209311925	RA TL DONOR 1925MM	1925
2209312000	RA TL DONOR 2000MM	2000
2209312050	RA TL DONOR 2050MM	2050

FINISHED GOODS PN	DESCRIPTION	DIMENSION "L"
2209321650	RA TL FG 1650MM	1650
2209321700	RA TL FG 1700MM	1700
2209321750	RA TL FG 1750MM	1750
2209321800	RA TL FG 1800MM	1800
2209321850	RA TL FG 1850MM	1850
2209321925	RA TL FG 1925MM	1925
2209322000	RA TL FG 2000MM	2000
2209322050	RA TL FG 2050MM	2050

THIS DRAWING CONTAINS INFORMATION THAT IS PROPRIETARY TO MOLEX ELECTRONIC TECHNOLOGIES, LLC AND SHOULD NOT BE USED WITHOUT WRITTEN PERMISSION

FUNCTIONAL SYMBOLS
FA = 0
FC = 0
FP = 0

DIVISIONAL SYMBOLS

DIMENSION UNITS	SCALE
MM	1:1

GENERAL TOLERANCES (UNLESS SPECIFIED)

ANGULAR TOL	± 0.5°
4 PLACES	±
3 PLACES	±
2 PLACES	±
1 PLACE	±
0 PLACES	±

DRAFT WHERE APPLICABLE MUST REMAIN WITHIN DIMENSIONS

CURRENT REV DESC: Change Dust Cover

STATUS: Design Approved
DRWN: Jia Ling Fan 2024-03-04
CHK'D: Tony Tong 2024-03-15
APPR: Benny (Xing Qiang) He 2024-03-15

THIRD ANGLE PROJECTION
DRAWING: D-SIZE
SERIES: 220929

molex

GENERAL MARKET NS PCIE CABLE

PRODUCT SALES DRAWING

DOCUMENT NUMBER	DOC TYPE	DOC PART	REVISION
2209291000	PSD	000	A3

MATERIAL NUMBER: SEE TABLE
CUSTOMER:
SHEET NUMBER: 5 OF 10

FORMAT TC-Sheet42
REVISION: B
DATE: 2020/8/31

220933 & 220934 SERIES ANGLE EXIT WITH PULL TAB TYPE

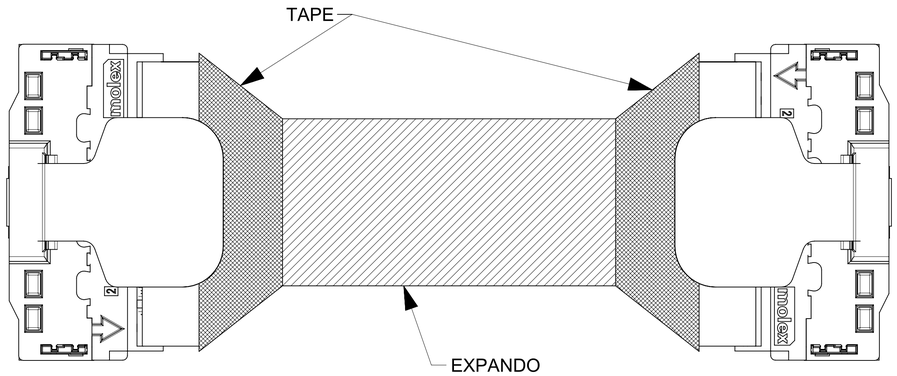

NOTE:

SEE SHEET 2 FOR PINOUT INFORMATION.

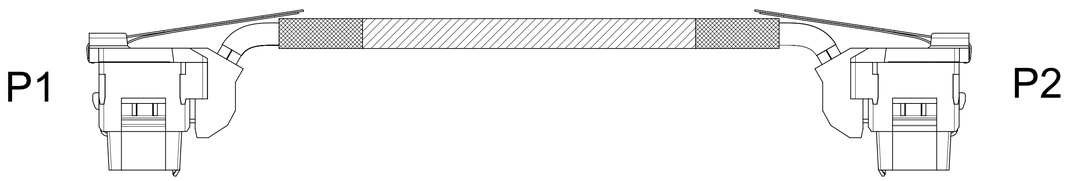

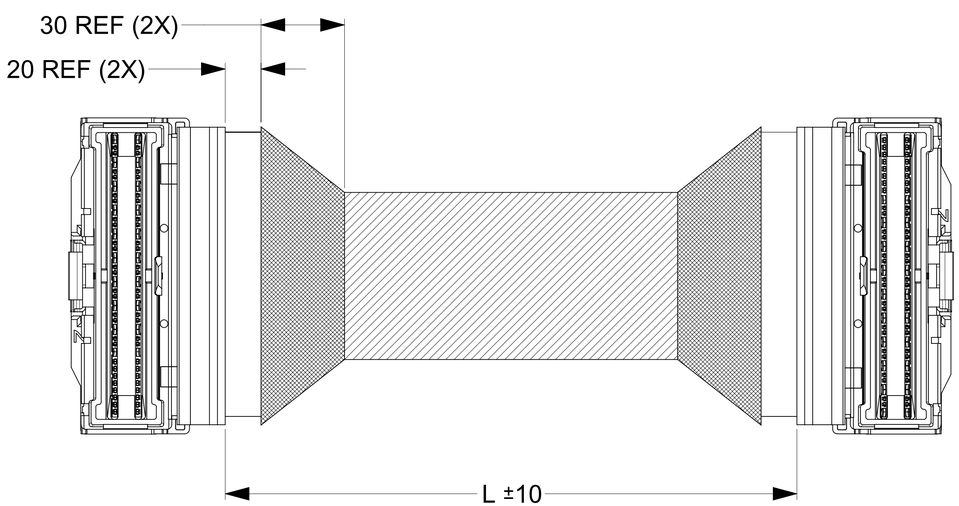

LENGTH WITH SLACK REMOVED FROM CABLE
AND HOLDING CONNECTORS AT A 60° ANGLE

FUNCTIONAL SYMBOLS	THIS DRAWING CONTAINS INFORMATION THAT IS PROPRIETARY TO MOLEX ELECTRONIC TECHNOLOGIES, LLC AND SHOULD NOT BE USED WITHOUT WRITTEN PERMISSION		
= 0	DIMENSION UNITS: MM	SCALE: 4:1	CURRENT REV DESC: Change Dust Cover
= 0	GENERAL TOLERANCES (UNLESS SPECIFIED)		
= 0	ANGULAR TOL ± 0.5°		
	4 PLACES ±		
DIVISIONAL SYMBOLS	3 PLACES ±		
	2 PLACES ±		
	1 PLACE ±		
	0 PLACES ±		
	DRAFT WHERE APPLICABLE MUST REMAIN WITHIN DIMENSIONS		

STATUS: Design Approved
DRWN: Jia Ling Fan 2024-03-04
CHK'D: Tony Tong 2024-03-15
APPR: Benny (Xing Qiang) He 2024-03-15

THIRD ANGLE PROJECTION | DRAWING: D-SIZE | SERIES: 220929

molex

GENERAL MARKET NS PCIE CABLE

PRODUCT SALES DRAWING

DOCUMENT NUMBER	DOC TYPE	DOC PART	REVISION
2209291000	PSD	000	A3

MATERIAL NUMBER	CUSTOMER	SHEET NUMBER
SEE TABLE		6 OF 10

FORMAT TC-Brand42
REVISION: B
DATE: 2022/06/01

220933 SERIES WITHOUT EXPANDO AND TAPE
220934 SERIES WITH EXPANDO AND TAPE

FINISHED GOODS PN	DESCRIPTION	DIMENSION "L"
2209330250	AE PT DONOR 250MM	250
2209330275	AE PT DONOR 275MM	275
2209330300	AE PT DONOR 300MM	300
2209330325	AE PT DONOR 325MM	325
2209330350	AE PT DONOR 350MM	350
2209330375	AE PT DONOR 375MM	375
2209330400	AE PT DONOR 400MM	400
2209330425	AE PT DONOR 425MM	425
2209330450	AE PT DONOR 450MM	450
2209330475	AE PT DONOR 475MM	475
2209330500	AE PT DONOR 500MM	500
2209330525	AE PT DONOR 525MM	525
2209330550	AE PT DONOR 550MM	550
2209330575	AE PT DONOR 575MM	575
2209330600	AE PT DONOR 600MM	600
2209330625	AE PT DONOR 625MM	625
2209330650	AE PT DONOR 650MM	650
2209330675	AE PT DONOR 675MM	675
2209330700	AE PT DONOR 700MM	700
2209330725	AE PT DONOR 725MM	725
2209330750	AE PT DONOR 750MM	750
2209330775	AE PT DONOR 775MM	775
2209330800	AE PT DONOR 800MM	800
2209330825	AE PT DONOR 825MM	825
2209330850	AE PT DONOR 850MM	850
2209330875	AE PT DONOR 875MM	875
2209330900	AE PT DONOR 900MM	900
2209330925	AE PT DONOR 925MM	925
2209330950	AE PT DONOR 950MM	950
2209330975	AE PT DONOR 975MM	975
2209331000	AE PT DONOR 1000MM	1000
2209331025	AE PT DONOR 1025MM	1025
2209331050	AE PT DONOR 1050MM	1050
2209331075	AE PT DONOR 1075MM	1075
2209331100	AE PT DONOR 1100MM	1100
2209331125	AE PT DONOR 1125MM	1125
2209331150	AE PT DONOR 1150MM	1150
2209331175	AE PT DONOR 1175MM	1175
2209331200	AE PT DONOR 1200MM	1200
2209331225	AE PT DONOR 1225MM	1225
2209331250	AE PT DONOR 1250MM	1250
2209331275	AE PT DONOR 1275MM	1275
2209331300	AE PT DONOR 1300MM	1300
2209331325	AE PT DONOR 1325MM	1325
2209331350	AE PT DONOR 1350MM	1350
2209331375	AE PT DONOR 1375MM	1375
2209331400	AE PT DONOR 1400MM	1400
2209331425	AE PT DONOR 1425MM	1425
2209331450	AE PT DONOR 1450MM	1450
2209331475	AE PT DONOR 1475MM	1475
2209331500	AE PT DONOR 1500MM	1500
2209331550	AE PT DONOR 1550MM	1550
2209331600	AE PT DONOR 1600MM	1600

FINISHED GOODS PN	DESCRIPTION	DIMENSION "L"
2209340250	AE PT FG 250MM	250
2209340275	AE PT FG 275MM	275
2209340300	AE PT FG 300MM	300
2209340325	AE PT FG 325MM	325
2209340350	AE PT FG 350MM	350
2209340375	AE PT FG 375MM	375
2209340400	AE PT FG 400MM	400
2209340425	AE PT FG 425MM	425
2209340450	AE PT FG 450MM	450
2209340475	AE PT FG 475MM	475
2209340500	AE PT FG 500MM	500
2209340525	AE PT FG 525MM	525
2209340550	AE PT FG 550MM	550
2209340575	AE PT FG 575MM	575
2209340600	AE PT FG 600MM	600
2209340625	AE PT FG 625MM	625
2209340650	AE PT FG 650MM	650
2209340675	AE PT FG 675MM	675
2209340700	AE PT FG 700MM	700
2209340725	AE PT FG 725MM	725
2209340750	AE PT FG 750MM	750
2209340775	AE PT FG 775MM	775
2209340800	AE PT FG 800MM	800
2209340825	AE PT FG 825MM	825
2209340850	AE PT FG 850MM	850
2209340875	AE PT FG 875MM	875
2209340900	AE PT FG 900MM	900
2209340925	AE PT FG 925MM	925
2209340950	AE PT FG 950MM	950
2209340975	AE PT FG 975MM	975
2209341000	AE PT FG 1000MM	1000
2209341025	AE PT FG 1025MM	1025
2209341050	AE PT FG 1050MM	1050
2209341075	AE PT FG 1075MM	1075
2209341100	AE PT FG 1100MM	1100
2209341125	AE PT FG 1125MM	1125
2209341150	AE PT FG 1150MM	1150
2209341175	AE PT FG 1175MM	1175
2209341200	AE PT FG 1200MM	1200
2209341225	AE PT FG 1225MM	1225
2209341250	AE PT FG 1250MM	1250
2209341275	AE PT FG 1275MM	1275
2209341300	AE PT FG 1300MM	1300
2209341325	AE PT FG 1325MM	1325
2209341350	AE PT FG 1350MM	1350
2209341375	AE PT FG 1375MM	1375
2209341400	AE PT FG 1400MM	1400
2209341425	AE PT FG 1425MM	1425
2209341450	AE PT FG 1450MM	1450
2209341475	AE PT FG 1475MM	1475
2209341500	AE PT FG 1500MM	1500
2209341550	AE PT FG 1550MM	1550
2209341600	AE PT FG 1600MM	1600

FINISHED GOODS PN	DESCRIPTION	DIMENSION "L"
2209331650	AE PT DONOR 1650MM	1650
2209331700	AE PT DONOR 1700MM	1700
2209331750	AE PT DONOR 1750MM	1750
2209331800	AE PT DONOR 1800MM	1800
2209331850	AE PT DONOR 1850MM	1850
2209331925	AE PT DONOR 1925MM	1925
2209332000	AE PT DONOR 2000MM	2000
2209332050	AE PT DONOR 2050MM	2050

FINISHED GOODS PN	DESCRIPTION	DIMENSION "L"
2209341650	AE PT FG 1650MM	1650
2209341700	AE PT FG 1700MM	1700
2209341750	AE PT FG 1750MM	1750
2209341800	AE PT FG 1800MM	1800
2209341850	AE PT FG 1850MM	1850
2209341925	AE PT FG 1925MM	1925
2209342000	AE PT FG 2000MM	2000
2209342050	AE PT FG 2050MM	2050

THIS DRAWING CONTAINS INFORMATION THAT IS PROPRIETARY TO MOLEX ELECTRONIC TECHNOLOGIES, LLC AND SHOULD NOT BE USED WITHOUT WRITTEN PERMISSION

FUNCTIONAL SYMBOLS
FA = 0
FC = 0
FP = 0

DIVISIONAL SYMBOLS

DIMENSION UNITS	SCALE
MM	1:1

GENERAL TOLERANCES (UNLESS SPECIFIED)

ANGULAR TOL	± 0.5°
4 PLACES	±
3 PLACES	±
2 PLACES	±
1 PLACE	±
0 PLACES	±

DRAFT WHERE APPLICABLE MUST REMAIN WITHIN DIMENSIONS

CURRENT REV DESC: Change Dust Cover

STATUS: Design Approved
DRWN: Jia Ling Fan 2024-03-04
CHK'D: Tony Tong 2024-03-15
APPR: Benny (Xing Qiang) He 2024-03-15

THIRD ANGLE PROJECTION | DRAWING: D-SIZE | SERIES: 220929

molex

GENERAL MARKET NS PCIE CABLE

PRODUCT SALES DRAWING

DOCUMENT NUMBER	DOC TYPE	DOC PART	REVISION
2209291000	PSD	000	A3

MATERIAL NUMBER: SEE TABLE | CUSTOMER | SHEET NUMBER: 7 OF 10

FORMAT TC(Alpha)=D
REVISION= B
DATE=2020/06/01

220935 & 220936 SERIES ANGLE EXIT WITH THUMB LATCH TYPE

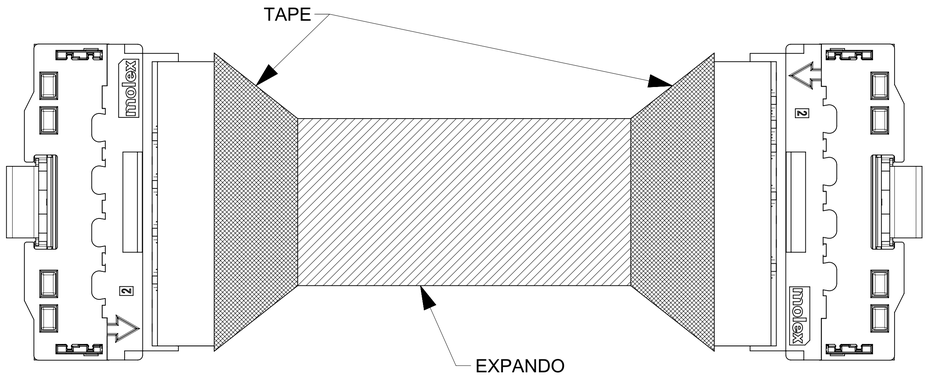

NOTE:

SEE SHEET 2 FOR PINOUT INFORMATION.

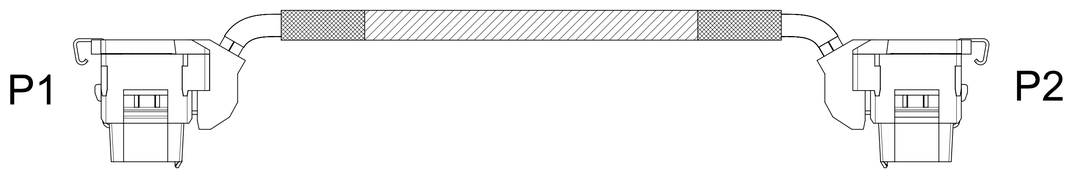

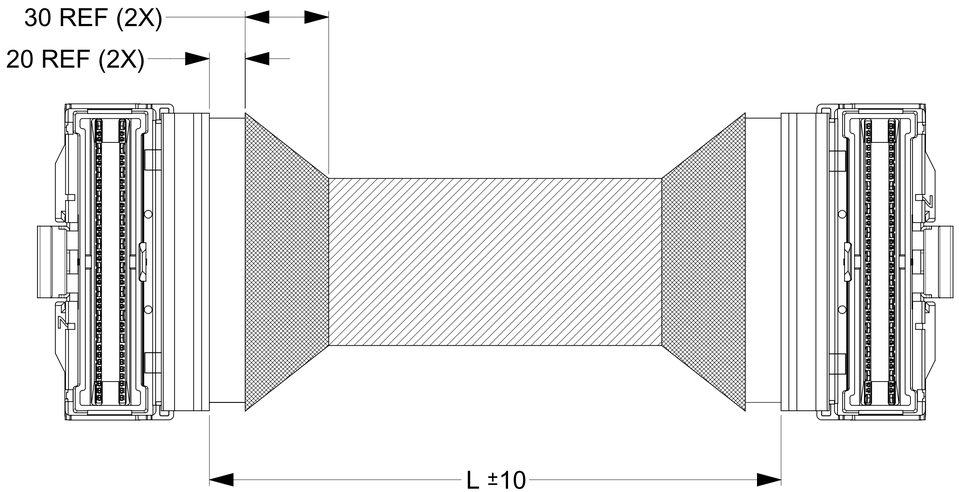

LENGTH WITH SLACK REMOVED FROM CABLE
AND HOLDING CONNECTORS AT A 60° ANGLE

FUNCTIONAL SYMBOLS	THIS DRAWING CONTAINS INFORMATION THAT IS PROPRIETARY TO MOLEX ELECTRONIC TECHNOLOGIES, LLC AND SHOULD NOT BE USED WITHOUT WRITTEN PERMISSION		
= 0	DIMENSION UNITS: MM	SCALE: 4:1	CURRENT REV DESC: Change Dust Cover
= 0	GENERAL TOLERANCES (UNLESS SPECIFIED)		
= 0	ANGULAR TOL ± 0.5°		
	4 PLACES ±		
DIVISIONAL SYMBOLS	3 PLACES ±		STATUS: Design Approved
	2 PLACES ±		DRWN: Jia Ling Fan 2024-03-04
	1 PLACE ±		CHK'D: Tony Tong 2024-03-15
	0 PLACES ±		APPR: Benny (Xing Qiang) He 2024-03-15
	DRAFT WHERE APPLICABLE MUST REMAIN WITHIN DIMENSIONS	THIRD ANGLE PROJECTION	DRAWING: D-SIZE / SERIES: 220929

molex

GENERAL MARKET NS PCIE CABLE

PRODUCT SALES DRAWING

DOCUMENT NUMBER	DOC TYPE	DOC PART	REVISION
2209291000	PSD	000	A3

MATERIAL NUMBER	CUSTOMER	SHEET NUMBER
SEE TABLE		8 OF 10

220935 SERIES WITHOUT EXPANDO AND TAPE
220936 SERIES WITH EXPANDO AND TAPE

FINISHED GOODS PN	DESCRIPTION	DIMENSION "L"
2209350250	AE TL DONOR 250MM	250
2209350275	AE TL DONOR 275MM	275
2209350300	AE TL DONOR 300MM	300
2209350325	AE TL DONOR 325MM	325
2209350350	AE TL DONOR 350MM	350
2209350375	AE TL DONOR 375MM	375
2209350400	AE TL DONOR 400MM	400
2209350425	AE TL DONOR 425MM	425
2209350450	AE TL DONOR 450MM	450
2209350475	AE TL DONOR 475MM	475
2209350500	AE TL DONOR 500MM	500
2209350525	AE TL DONOR 525MM	525
2209350550	AE TL DONOR 550MM	550
2209350575	AE TL DONOR 575MM	575
2209350600	AE TL DONOR 600MM	600
2209350625	AE TL DONOR 625MM	625
2209350650	AE TL DONOR 650MM	650
2209350675	AE TL DONOR 675MM	675
2209350700	AE TL DONOR 700MM	700
2209350725	AE TL DONOR 725MM	725
2209350750	AE TL DONOR 750MM	750
2209350775	AE TL DONOR 775MM	775
2209350800	AE TL DONOR 800MM	800
2209350825	AE TL DONOR 825MM	825
2209350850	AE TL DONOR 850MM	850
2209350875	AE TL DONOR 875MM	875
2209350900	AE TL DONOR 900MM	900
2209350925	AE TL DONOR 925MM	925
2209350950	AE TL DONOR 950MM	950
2209350975	AE TL DONOR 975MM	975
2209351000	AE TL DONOR 1000MM	1000
2209351025	AE TL DONOR 1025MM	1025
2209351050	AE TL DONOR 1050MM	1050
2209351075	AE TL DONOR 1075MM	1075
2209351100	AE TL DONOR 1100MM	1100
2209351125	AE TL DONOR 1125MM	1125
2209351150	AE TL DONOR 1150MM	1150
2209351175	AE TL DONOR 1175MM	1175
2209351200	AE TL DONOR 1200MM	1200
2209351225	AE TL DONOR 1225MM	1225
2209351250	AE TL DONOR 1250MM	1250
2209351275	AE TL DONOR 1275MM	1275
2209351300	AE TL DONOR 1300MM	1300
2209351325	AE TL DONOR 1325MM	1325
2209351350	AE TL DONOR 1350MM	1350
2209351375	AE TL DONOR 1375MM	1375
2209351400	AE TL DONOR 1400MM	1400
2209351425	AE TL DONOR 1425MM	1425
2209351450	AE TL DONOR 1450MM	1450
2209351475	AE TL DONOR 1475MM	1475
2209351500	AE TL DONOR 1500MM	1500
2209351550	AE TL DONOR 1550MM	1550
2209351600	AE TL DONOR 1600MM	1600

FINISHED GOODS PN	DESCRIPTION	DIMENSION "L"
2209360250	AE TL FG 250MM	250
2209360275	AE TL FG 275MM	275
2209360300	AE TL FG 300MM	300
2209360325	AE TL FG 325MM	325
2209360350	AE TL FG 350MM	350
2209360375	AE TL FG 375MM	375
2209360400	AE TL FG 400MM	400
2209360425	AE TL FG 425MM	425
2209360450	AE TL FG 450MM	450
2209360475	AE TL FG 475MM	475
2209360500	AE TL FG 500MM	500
2209360525	AE TL FG 525MM	525
2209360550	AE TL FG 550MM	550
2209360575	AE TL FG 575MM	575
2209360600	AE TL FG 600MM	600
2209360625	AE TL FG 625MM	625
2209360650	AE TL FG 650MM	650
2209360675	AE TL FG 675MM	675
2209360700	AE TL FG 700MM	700
2209360725	AE TL FG 725MM	725
2209360750	AE TL FG 750MM	750
2209360775	AE TL FG 775MM	775
2209360800	AE TL FG 800MM	800
2209360825	AE TL FG 825MM	825
2209360850	AE TL FG 850MM	850
2209360875	AE TL FG 875MM	875
2209360900	AE TL FG 900MM	900
2209360925	AE TL FG 925MM	925
2209360950	AE TL FG 950MM	950
2209360975	AE TL FG 975MM	975
2209361000	AE TL FG 1000MM	1000
2209361025	AE TL FG 1025MM	1025
2209361050	AE TL FG 1050MM	1050
2209361075	AE TL FG 1075MM	1075
2209361100	AE TL FG 1100MM	1100
2209361125	AE TL FG 1125MM	1125
2209361150	AE TL FG 1150MM	1150
2209361175	AE TL FG 1175MM	1175
2209361200	AE TL FG 1200MM	1200
2209361225	AE TL FG 1225MM	1225
2209361250	AE TL FG 1250MM	1250
2209361275	AE TL FG 1275MM	1275
2209361300	AE TL FG 1300MM	1300
2209361325	AE TL FG 1325MM	1325
2209361350	AE TL FG 1350MM	1350
2209361375	AE TL FG 1375MM	1375
2209361400	AE TL FG 1400MM	1400
2209361425	AE TL FG 1425MM	1425
2209361450	AE TL FG 1450MM	1450
2209361475	AE TL FG 1475MM	1475
2209361500	AE TL FG 1500MM	1500
2209361550	AE TL FG 1550MM	1550
2209361600	AE TL FG 1600MM	1600

FINISHED GOODS PN	DESCRIPTION	DIMENSION "L"
2209351650	AE TL DONOR 1650MM	1650
2209351700	AE TL DONOR 1700MM	1700
2209351750	AE TL DONOR 1750MM	1750
2209351800	AE TL DONOR 1800MM	1800
2209351850	AE TL DONOR 1850MM	1850
2209351925	AE TL DONOR 1925MM	1925
2209352000	AE TL DONOR 2000MM	2000
2209352050	AE TL DONOR 2050MM	2050

FINISHED GOODS PN	DESCRIPTION	DIMENSION "L"
2209361650	AE TL FG 1650MM	1650
2209361700	AE TL FG 1700MM	1700
2209361750	AE TL FG 1750MM	1750
2209361800	AE TL FG 1800MM	1800
2209361850	AE TL FG 1850MM	1850
2209361925	AE TL FG 1925MM	1925
2209362000	AE TL FG 2000MM	2000
2209362050	AE TL FG 2050MM	2050

FUNCTIONAL SYMBOLS
FA = 0
FC = 0
FE = 0
DIVISIONAL SYMBOLS

THIS DRAWING CONTAINS INFORMATION THAT IS PROPRIETARY TO MOLEX ELECTRONIC TECHNOLOGIES, LLC AND SHOULD NOT BE USED WITHOUT WRITTEN PERMISSION

DIMENSION UNITS: MM
SCALE: 1:1
GENERAL TOLERANCES (UNLESS SPECIFIED)
ANGULAR TOL ± 0.5°
4 PLACES ±
3 PLACES ±
2 PLACES ±
1 PLACE ±
0 PLACES ±
DRAFT WHERE APPLICABLE MUST REMAIN WITHIN DIMENSIONS

CURRENT REV DESC: Change Dust Cover

STATUS: Design Approved
DRWN: Jia Ling Fan 2024-03-04
CHK'D: Tony Tong 2024-03-15
APPR: Benny (Xing Qiang) He 2024-03-15

THIRD ANGLE PROJECTION
DRAWING: D-SIZE
SERIES: 220929

molex

GENERAL MARKET NS PCIE CABLE

PRODUCT SALES DRAWING

DOCUMENT NUMBER	DOC TYPE	DOC PART	REVISION
2209291000	PSD	000	A3

MATERIAL NUMBER: SEE TABLE
CUSTOMER:
SHEET NUMBER: 9 OF 10

FORMAT TC(Alpha)=D
REVISION: B
DATE: 2020-06-01

REVISION HISTORY			
DATE	REVISION	DESCRIPTION	ENGINEER
2022/06/09	1	PRELIMINARY RELEASE	MARTIN FAN
2022/06/23	A	INITIAL RELEASE	MARTIN FAN
2022/07/25	A1	ADD LASER MARK CONTENT INFORMATION AND REMOVE ORGANIZER PN.	ALVIN ZHANG
2022/12/01	A2	ADD ADDITIONAL LENGTH OPTION (1650 1700 1750 1800 1850 2000 2050) FOR ALL 220929 TO 220936 SERIES	MARTIN FAN
2024/03/08	A3	UP REVISION FOR REFLECTING THE DUST COVER CHANGE	MARTIN FAN

THIS DRAWING CONTAINS INFORMATION THAT IS PROPRIETARY TO MOLEX ELECTRONIC TECHNOLOGIES, LLC AND SHOULD NOT BE USED WITHOUT WRITTEN PERMISSION

FUNCTIONAL SYMBOLS
FA = 0
FC = 0
FD = 0

DIVISIONAL SYMBOLS

DIMENSION UNITS	SCALE
MM	1:1

GENERAL TOLERANCES (UNLESS SPECIFIED)

ANGULAR TOL	±	0.5°
4 PLACES	±	
3 PLACES	±	
2 PLACES	±	
1 PLACE	±	
0 PLACES	±	

DRAFT WHERE APPLICABLE MUST REMAIN WITHIN DIMENSIONS

CURRENT REV DESC: Change Dust Cover

STATUS: Design Approved
DRWN: Jia Ling Fan 2024-03-04
CHK'D: Tony Tong 2024-03-15
APPR: Benny (Xing Qiang) He 2024-03-15

THIRD ANGLE PROJECTION | DRAWING: D-SIZE | SERIES: 220929

molex

GENERAL MARKET NS PCIE CABLE

PRODUCT SALES DRAWING

DOCUMENT NUMBER	DOC TYPE	DOC PART	REVISION
2209291000	PSD	000	A3

MATERIAL NUMBER: SEE TABLE | CUSTOMER | SHEET NUMBER: 10 OF 10

FORMAT TC(Alpha)0
REVISION: B
DATE: 2020/06/01