THIS DRAWING IS UNPUBLISHED. RELEASED FOR PUBLICATION
© COPYRIGHT 2017 BY TE CONNECTIVITY CORPORATION ALL RIGHTS RESERVED.

REVISIONS

P	LTR	DESCRIPTION	DATE	DWN	APVD
	E5	ECN-22-137159	13JAN2022	SM	PK
	E6	ECN-22-185510	21NOV2022	PK	PK
	E7	ECN-22-185978	22NOV2022	PK	PK
	E8	REV PER ECN-22-188519	07DEC2022	SMR	PK

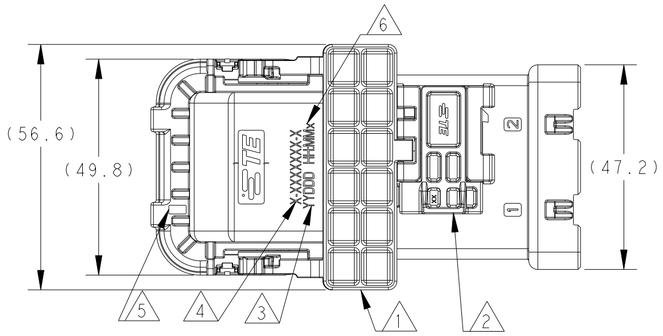

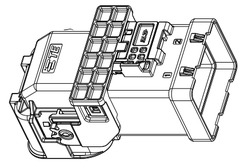

TOP ISOMETRIC VIEW
(4-2840672-1)
SCALE 1:2

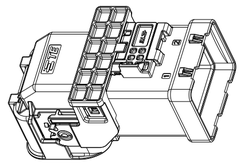

TOP ISOMETRIC VIEW
(5-2840672-1)
SCALE 1:2

E7

1. SUPPLY CONDITION: LEVER IN CLOSED POSITION
2. SUPPLY CONDITION: CPA IN CLOSED POSITION
3. LASER MARK DATE CODE: YYDDD hh:mm FORMAT
4. LASER MARK TE PART NUMBER
5. CAVITY ID
6. LASER MARK WORK CENTER.
7. MATERIAL ID IN THIS LOCATION ONLY FOR COMPONENTS MOLDED IN CHINA.
8. THIS PART IS MADE FROM 2337828-4 (ON REEL) IN THE AUTOMATED MACHINE.

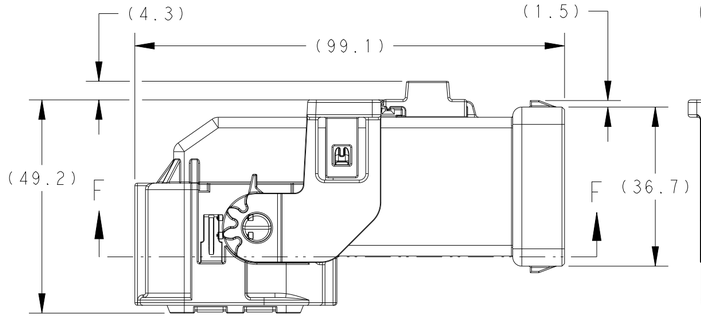

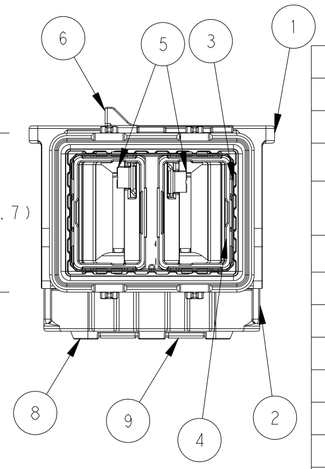

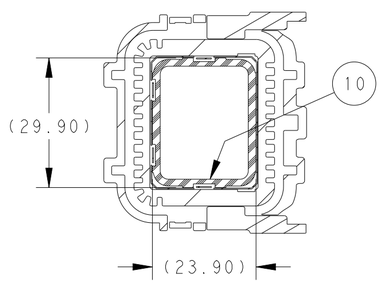

SECTION F-F

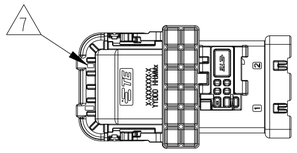

3-2840672-1
SCALE 1:2

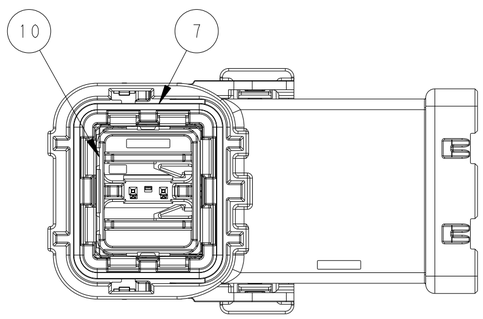

2-2840672-1 SHOWN

5-2840672-1	4-2840672-1	3-2840672-1	2-2840672-1	2840672-1	1-2840672-1	COLOR	MATERIAL	DESCRIPTION	ITEM NO
1	-	-	SUPERSEDED BY 3-2840672-1	SUPERSEDED BY 3-2840672-1	SUPERSEDED BY 3-2840672-1	NATURAL	PA66-GF30/PA10T-GF30	PD3 SLEEVE ALTERNATE MATERIAL	10
-	1	1					PA66/6T-GF30-FR(40)	PD3 SLEEVE ANTI-STUB	
-	-	-						PD3 SLEEVE	
1	-	-				-	CuNiSi PLATING:Ag OVER Ni	LOWER SHIELD IMPROVED EMC	9
-	1	7				-	CuNiSi PLATING: Spot Plated Ag OVER Ni	LOWER SHIELD SPOT PLATED	
-	-	1				-	CuNiSi PLATING:Ag OVER Ni	LOWER SHIELD	
1	1	1				BLACK	PA66-GF35	PERIPHERAL SEAL RETAINER	8
1	1	1				LIGHT BLUE / YELLOW	40 DUROMETER SILICONE, LUBRICATED	PERIPHERAL SEAL	7
-	-	-							
1	1	1				RED	PA66-GF35	CPA WITH IMPROVED INTERLOCK	6
-	-	-				RED	PA66-GF35	CPA WITH REINFORCED PUSH PAD	
-	-	-				RED	PA66-GF35	CPA WITH PUSH PAD	
8 2	2	2				-	SS	HV TAB RETAINER ANTI-SKIVING	5
-	-	-				-	SS	HV TAB RETAINER	
1	-	-				NATURAL	PA66/6T-GF30-FR(40)	INNER HOUSING ASSY IMPROVED EMC	4
-	1	1						INNER HOUSING ASSY ANTI-SKIVING	
-	-	-						INNER HOUSING ASSEMBLY	
1	-	-				-	CuNiSi PLATING:Ag OVER Ni	UPPER SHIELD IMPROVED EMC	3
-	1	-				-	CuNiSi PLATING: Spot Plated Ag OVER Ni	UPPER SHIELD SPOT PLATED	
-	-	1				-	CuNiSi PLATING:Ag OVER Ni	UPPER SHIELD	
1	-	-				ORANGE	PA66-GF33	OUTER HOUSING IMPROVED EMC	2
-	1	-						OUTER HOUSING, IMPROVED SHIPPING RETENTION	
-	-	1						OUTER HOUSING, HIGH RETENTION	
-	-	-						OUTER HOUSING	
1	1	-				BLACK	PA66-GF35	LEVER, IMPROVED SHIPPING RETENTION	1
-	-	1						LEVER, IMPROVED INTERLOCK	
-	-	-						LEVER	
QTY REQ PER ASSY						REVISION OF EACH ASSY NO (WHEN BLANK, USE DRAWING REVISION)		PARTS LIST	

THIS DRAWING IS A CONTROLLED DOCUMENT.

DIMENSIONS: mm

TOLERANCES UNLESS OTHERWISE SPECIFIED:
0 PLC ±-
1 PLC ±-
2 PLC ±-
3 PLC ±-
4 PLC ±-
ANGLES ±-

MATERIAL
FINISH

DWN A. BOYER 20SEP2017
CHK A. BOYER 20SEP2017
APVD A. BOYER 20SEP2017
PRODUCT SPEC -
APPLICATION SPEC 114-162001
WEIGHT 109 g

TE Connectivity

NAME PLUG SUB-ASSEMBLY HC-STAK 25-2phi

SIZE A2 | CAGE CODE 00779 | DRAWING NO C-2840672 | RESTRICTED TO -

CUSTOMER DRAWING | SCALE 1:1 | SHEET 1 OF 1 | REV E8

1471-9 (3/13)