molex

MX150 RECEPTACLE 2X10 SEALED ASSEMBLY MAT SEAL
BOM AND PIN OUT SHEET

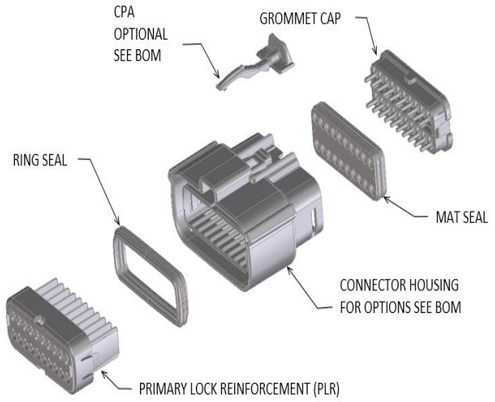

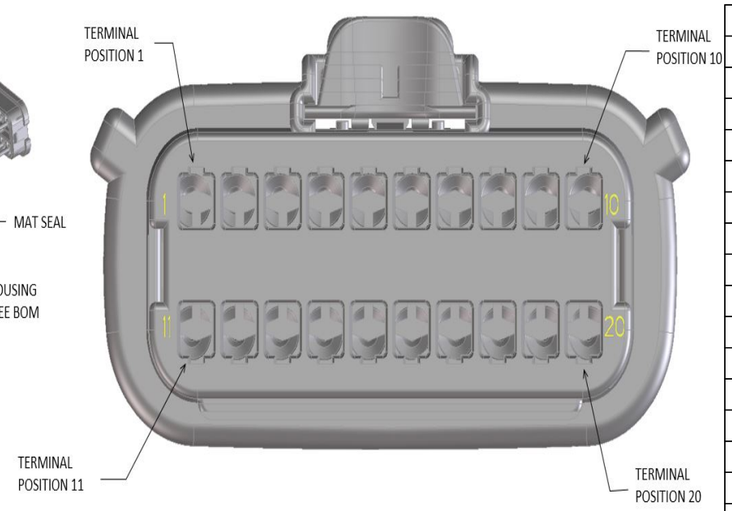

ABBREVIATION	DESCRIPTION	COLOR	MATERIAL
A-BLACK	HOUSING, KEYING OPTION A	BLACK	SPS/NYLON GF20
B-LIGHT GRAY	HOUSING, KEYING OPTION B	LIGHT GRAY	SPS/NYLON GF20
C-BROWN	HOUSING, KEYING OPTION C	BROWN	SPS/NYLON GF20
D-GREEN	HOUSING, KEYING OPTION D	GREEN	SPS/NYLON GF20
C-DARK GRAY	HOUSING, KEYING OPTION C	DARK GRAY	SPS/NYLON GF20
D-STONE GRAY	HOUSING, KEYING OPTION D	STONE GRAY	SPS/NYLON GF20
A-YELLOW	HOUSING, KEYING OPTION A	YELLOW	SPS/NYLON GF20
A-BLACK-CLIP	HOUSING, KEYING OPTION A WITH CLIPSLOT	BLACK	SPS/NYLON GF20
B-LIGHT GRAY-CLIP	HOUSING, KEYING OPTION B WITH CLIPSLOT	LIGHT GRAY	SPS/NYLON GF20
C-DARK GRAY-CLIP	HOUSING, KEYING OPTION C WITH CLIPSLOT	DARK GRAY	SPS/NYLON GF20
D-STONE GRAY-CLIP	HOUSING, KEYING OPTION D WITH CLIPSLOT	STONE GRAY	SPS/NYLON GF20
A-YELLOW-CLIP	HOUSING, KEYING OPTION A WITH CLIPSLOT	YELLOW	SPS/NYLON GF20
B-YELLOW-CLIP	HOUSING, KEYING OPTION B WITH CLIPSLOT	YELLOW	SPS/NYLON GF20
GCP	GROMMET CAP (PLUGGED)	BLACK	SPS/NYLON GF20
GCO	GROMMET CAP (OPEN)	BLACK	SPS/NYLON GF20
PLR	PLR	NATURAL	SPS/NYLON GF20
CPA	CPA	RED	PBT GF30
M	MAT SEAL	LIGHT BLUE	INHERENTLY LUBRICATED SILICONE
R	RING SEAL	GREEN	INHERENTLY LUBRICATED SILICONE

FOR ADDITIONAL INFORMATION SEE SD-33472-0001

ASSEMBLY DESCRIPTION	ASSEMBLY PART NUMBER	COMPONENT						BLOCKED TERMINALS										STATUS	COMMENT	OPTIONAL ATTACHMENTS SOLD SEPARATELY			
		THE PRESENCE OF AN ABBREVIATION INDICATES THE PRESENCE OF THAT COMPONENT						CAVITY WITH A NUMBER INDICATES BLOCKED TERMINAL POSITION CAVITY WITHOUT A NUMBER INDICATES OPEN TERMINAL POSITION															
		HOUSING KEY/COLOR	GROMMET CAP	PLR	CPA	MAT SEAL	RING SEAL													BACKSHELL WITH RIBS	BACKSHELL WITHOUT RIBS	90^0 ADAPTOR WITH RIBS	90^0 ADAPTOR WITHOUT RIBS
KEY B, YELLOW, WITH CLIPSLOT, W/CPA	334720200	B-YELLOW-CLIP	GCO	PLR	CPA	M	R	-	-	-	-	-	-	-	-	-	-	NOT RECOMMENDED		34951-2011	34951-2021	34951-1631	34951-1641
								-	-	-	-	-	-	-	-	-	-						
KEY B, YELLOW, WITH CLIPSLOT, W/CPA	334720201	B-YELLOW-CLIP	GCP	PLR	CPA	M	R	1	-	3	-	5	-	-	-	-	-	SALEABLE		34951-2011	34951-2021	34951-1631	34951-1641
								-	-	-	14	15	-	-	-	-	-						
MX150 ASSY RCP 2X10 BK A/20	334722001	A-BLACK	GCO	PLR		M	R	-	-	-	-	-	-	-	-	-	-	SALEABLE		N/A	N/A	N/A	N/A
								-	-	-	-	-	-	-	-	-	-						
MX150 ASSY RCP 2X10 LG B/20	334722002	B-LIGHT GRAY	GCO	PLR		M	R	-	-	-	-	-	-	-	-	-	-	SALEABLE		N/A	N/A	N/A	N/A
								-	-	-	-	-	-	-	-	-	-						
MX150 ASSY RCP 2X10 BR C/20	334722003	C-BROWN	GCO	PLR		M	R	-	-	-	-	-	-	-	-	-	-	NOT RECOMMENDED	SEE 334722060	N/A	N/A	N/A	N/A
								-	-	-	-	-	-	-	-	-	-						
MX150 ASSY RCP 2X10 GR D/20	334722004	D-GREEN	GCO	PLR		M	R	-	-	-	-	-	-	-	-	-	-	NOT RECOMMENDED	SEE 334722061	N/A	N/A	N/A	N/A
								-	-	-	-	-	-	-	-	-	-						
MX150 ASSY RCP 2X10 CPA BK A/20	334722006	A-BLACK	GCO	PLR	CPA	M	R	-	-	-	-	-	-	-	-	-	-	SALEABLE		N/A	N/A	N/A	N/A
								-	-	-	-	-	-	-	-	-	-						
MX150 ASSY RCP 2X10 CPA LG B/20	334722007	B-LIGHT GRAY	GCO	PLR	CPA	M	R	-	-	-	-	-	-	-	-	-	-	SALEABLE		N/A	N/A	N/A	N/A
								-	-	-	-	-	-	-	-	-	-						
MX150 ASSY RCP 2X10 CPA BR C/20	334722008	C-BROWN	GCO	PLR	CPA	M	R	-	-	-	-	-	-	-	-	-	-	NOT RECOMMENDED	SEE 334722062	N/A	N/A	N/A	N/A
								-	-	-	-	-	-	-	-	-	-						
MX150 ASSY RCP 2X10 CPA GR D/20	334722009	D-GREEN	GCO	PLR	CPA	M	R	-	-	-	-	-	-	-	-	-	-	NOT RECOMMENDED	SEE 334722063	N/A	N/A	N/A	N/A
								-	-	-	-	-	-	-	-	-	-						
MX150 ASSY RCP 2X10 CPA BK A/19	334722011	A-BLACK	GCP	PLR	CPA	M	R	-	-	-	-	-	-	-	-	-	-	SALEABLE		N/A	N/A	N/A	N/A
								-	-	-	-	-	-	-	-	-	20						
MX150 ASSY RCP 2X10 BK A/19	334722012	A-BLACK	GCP	PLR		M	R	-	-	-	-	-	-	-	-	-	-	SALEABLE		N/A	N/A	N/A	N/A
								11	-	-	-	-	-	-	-	-	-						
MX150 ASSY RCP 2X10 BK A/12	334722013	A-BLACK	GCP	PLR		M	R	-	-	-	4	5	6	7	-	-	-	SALEABLE		N/A	N/A	N/A	N/A
								-	-	-	14	15	16	17	-	-	-						
MX150 ASSY RCP 2X10 BK A/18	334722014	A-BLACK	GCP	PLR		M	R	-	-	-	-	-	-	7	-	-	-	SALEABLE		N/A	N/A	N/A	N/A
								-	-	-	-	-	16	-	-	-	-						
MX150 ASSY RCP 2X10 CPA BK A/15	334722015	A-BLACK	GCP	PLR	CPA	M	R	-	2	-	-	-	-	-	-	9	-	SALEABLE		N/A	N/A	N/A	N/A
								-	12	-	-	15	-	-	-	19	-						

molex

MX150 RECEPTACLE 2X10 SEALED ASSEMBLY MAT SEAL
BOM AND PIN OUT SHEET

ASSEMBLY DESCRIPTION	ASSEMBLY PART NUMBER	COMPONENT						BLOCKED TERMINALS										STATUS	COMMENT	OPTIONAL ATTACHMENTS SOLD SEPARATELY			
		THE PRESENCE OF AN ABBREVIATION INDICATES THE PRESENCE OF THAT COMPONENT						CAVITY WITH A NUMBER INDICATES BLOCKED TERMINAL POSITION CAVITY WITHOUT A NUMBER INDICATES OPEN TERMINAL POSITION															
		HOUSING KEY/COLOR	GROMMET CAP	PLR	CPA	MAT SEAL	RING SEAL													BACKSHELL WITH RIBS	BACKSHELL WITHOUT RIBS	90° ADAPTOR WITH RIBS	90° ADAPTOR WITHOUT RIBS
MX150 ASSY RCP 2X10 CPA BK A/16	334722016	A-BLACK	GCP	PLR	CPA	M	R	-	-	3	-	-	-	-	-	9	-	SALEABLE		N/A	N/A	N/A	N/A
								-	-	13	-	-	-	-	-	19	-						
MX150 ASSY RCP 2X10 CPA BK A/15	334722017	A-BLACK	GCP	PLR	CPA	M	R	-	-	-	-	-	-	-	-	9	-	SALEABLE		N/A	N/A	N/A	N/A
								11	-	13	-	15	16	-	-	-	-						
MX150 ASSY RCP 2X10 CPA BK A/16	334722018	A-BLACK	GCP	PLR	CPA	M	R	-	-	-	-	-	-	-	-	-	10	SALEABLE		N/A	N/A	N/A	N/A
								11	12	-	-	-	-	-	-	-	20						
MX150 ASSY RCP 2X10 CPA BK A/17	334722019	A-BLACK	GCP	PLR	CPA	M	R	1	2	-	-	-	-	-	-	-	-	SALEABLE		N/A	N/A	N/A	N/A
								-	-	-	-	-	-	-	-	-	20						
MX150 ASSY RCP 2X10 CPA BK A/14	334722020	A-BLACK	GCP	PLR	CPA	M	R	1	2	-	-	-	-	-	-	-	10	SALEABLE		N/A	N/A	N/A	N/A
								11	12	-	-	-	-	-	-	-	20						
MX150 ASSY RCP 2X10 CPA BK A/12	334722021	A-BLACK	GCP	PLR	CPA	M	R	1	2	-	-	-	-	-	-	-	10	SALEABLE		N/A	N/A	N/A	N/A
								11	12	13	14	-	-	-	-	-	20						
MX150 ASSY RCP 2X10 CPA BK A/18	334722022	A-BLACK	GCP	PLR	CPA	M	R	-	-	-	-	-	-	-	-	-	-	SALEABLE		N/A	N/A	N/A	N/A
								-	-	-	-	-	16	-	18	-	-						
MX150 ASSY RCP 2X10 CPA BK A/17	334722023	A-BLACK	GCP	PLR	CPA	M	R	-	-	-	-	-	-	-	-	-	-	SALEABLE		N/A	N/A	N/A	N/A
								-	-	-	-	-	-	-	18	19	20						
MX150 ASSY RCP 2X10 CPA BK A/16	334722024	A-BLACK	GCP	PLR	CPA	M	R	-	2	-	-	-	-	-	-	-	-	SALEABLE		N/A	N/A	N/A	N/A
								-	-	-	-	-	-	-	18	19	20						
MX150 ASSY RCP 2X10 CPA BK A/14	334722025	A-BLACK	GCP	PLR	CPA	M	R	-	-	3	4	5	-	-	-	-	-	SALEABLE		N/A	N/A	N/A	N/A
								11	-	-	-	-	16	17	-	-	-						
MX150 ASSY RCP 2X10 CPA BK A/15	334722026	A-BLACK	GCP	PLR	CPA	M	R	-	-	3	4	-	-	-	-	-	10	SALEABLE		N/A	N/A	N/A	N/A
								-	-	-	14	-	-	-	-	19	-						
MX150 ASSY RCP 2X10 CPA BK A/14	334722027	A-BLACK	GCP	PLR	CPA	M	R	-	-	3	4	5	-	-	-	-	10	SALEABLE		N/A	N/A	N/A	N/A
								-	-	-	14	-	-	-	-	19	-						
MX150 ASSY RCP 2X10 CPA BK A/10	334722028	A-BLACK	GCP	PLR	CPA	M	R	-	-	3	4	5	-	-	-	-	-	SALEABLE		N/A	N/A	N/A	N/A
								11	-	-	14	-	16	17	18	19	20						
MX150 ASSY RCP 2X10 CPA BK A/12	334722029	A-BLACK	GCP	PLR	CPA	M	R	-	-	3	4	5	-	-	-	-	-	SALEABLE		N/A	N/A	N/A	N/A
								11	-	-	14	-	16	17	-	19	-						
MX150 ASSY RCP 2X10 CPA BK A/13	334722030	A-BLACK	GCP	PLR	CPA	M	R	-	-	3	4	5	-	-	-	-	10	SALEABLE		N/A	N/A	N/A	N/A
								-	-	-	14	-	-	17	-	19	-						
MX150 ASSY RCP 2X10 CPA BK A/14	334722031	A-BLACK	GCP	PLR	CPA	M	R	-	-	3	4	-	-	-	-	-	10	SALEABLE		N/A	N/A	N/A	N/A
								-	-	-	14	-	-	17	-	19	-						
MX150 ASSY RCP 2X10 CPA BK A/15	334722032	A-BLACK	GCP	PLR	CPA	M	R	-	-	-	-	-	-	-	-	-	10	SALEABLE		N/A	N/A	N/A	N/A
								-	12	13	14	-	-	-	-	19	-						
MX150 ASSY RCP 2X10 CPA BK A/13	334722033	A-BLACK	GCP	PLR	CPA	M	R	-	-	3	4	-	-	-	-	-	-	SALEABLE		N/A	N/A	N/A	N/A
								11	-	-	14	-	16	17	-	19	-						
MX150 ASSY RCP 2X10 CPA BK A/19	334722034	A-BLACK	GCP	PLR	CPA	M	R	-	-	-	-	-	-	-	-	-	-	SALEABLE		N/A	N/A	N/A	N/A
								11	-	-	-	-	-	-	-	-	-						
MX150 ASSY RCP 2X10 CPA BK A/11	334722035	A-BLACK	GCP	PLR	CPA	M	R	1	2	-	-	-	-	-	-	-	10	SALEABLE		N/A	N/A	N/A	N/A
								11	12	13	14	15	-	-	-	-	20						
MX150 ASSY RCP 2X10 CPA BK A/13	334722036	A-BLACK	GCP	PLR	CPA	M	R	1	2	-	-	-	-	-	-	-	10	SALEABLE		N/A	N/A	N/A	N/A
								11	12	-	-	15	-	-	-	-	20						
MX150 ASSY RCP 2X10 CPA BK A/13	334722037	A-BLACK	GCP	PLR	CPA	M	R	-	-	-	-	-	-	-	-	-	10	SALEABLE		N/A	N/A	N/A	N/A
								11	12	13	14	15	-	-	-	-	20						
MX150 ASSY RCP 2X10 CPA BK A/14	334722038	A-BLACK	GCP	PLR	CPA	M	R	-	-	-	-	-	-	-	-	-	10	SALEABLE		N/A	N/A	N/A	N/A
								11	12	13	14	-	-	-	-	-	20						
MX150 ASSY RCP 2X10 CPA BK A/15	334722039	A-BLACK	GCP	PLR	CPA	M	R	-	-	-	-	-	-	-	-	-	10	SALEABLE		N/A	N/A	N/A	N/A
								11	12	-	-	15	-	-	-	-	20						
MX150 ASSY RCP 2X10 CPA BK A/12	334722040	A-BLACK	GCP	PLR	CPA	M	R	-	-	3	-	-	-	-	-	-	10	SALEABLE		N/A	N/A	N/A	N/A
								11	12	-	-	15	16	17	-	-	20						
MX150 ASSY RCP 2X10 CPA BK A/10	334722041	A-BLACK	GCP	PLR	CPA	M	R	-	-	3	4	5	-	-	-	-	10	SALEABLE		N/A	N/A	N/A	N/A
								11	12	-	-	15	16	17	-	-	20						
MX150 ASSY RCP 2X10 CPA BK A/15	334722042	A-BLACK	GCP	PLR	CPA	M	R	-	-	3	-	-	-	-	-	-	-	SALEABLE		N/A	N/A	N/A	N/A
								-	-	-	-	15	16	17	-	-	20						

molex

MX150 RECEPTACLE 2X10 SEALED ASSEMBLY MAT SEAL
BOM AND PIN OUT SHEET

ASSEMBLY DESCRIPTION	ASSEMBLY PART NUMBER	COMPONENT						BLOCKED TERMINALS										STATUS	COMMENT	OPTIONAL ATTACHMENTS SOLD SEPARATELY			
		THE PRESENCE OF AN ABBREVIATION INDICATES THE PRESENCE OF THAT COMPONENT						CAVITY WITH A NUMBER INDICATES BLOCKED TERMINAL POSITION CAVITY WITHOUT A NUMBER INDICATES OPEN TERMINAL POSITION															
		HOUSING KEY/COLOR	GROMMET CAP	PLR	CPA	MAT SEAL	RING SEAL													BACKSHELL WITH RIBS	BACKSHELL WITHOUT RIBS	90^0 ADAPTOR WITH RIBS	90^0 ADAPTOR WITHOUT RIBS
MX150 ASSY RCP 2X10 CPA BK A/11	334722043	A-BLACK	GCP	PLR	CPA	M	R	1	2	3	4	5	-	-	-	-	-	SALEABLE		N/A	N/A	N/A	N/A
								-	-	-	-	15	16	17	-	-	20						
MX150 ASSY RCP 2X10 CPA BK A/14	334722044	A-BLACK	GCP	PLR	CPA	M	R	1	2	3	4	5	-	-	-	-	-	SALEABLE		N/A	N/A	N/A	N/A
								-	-	-	-	-	-	-	-	-	20						
MX150 ASSY RCP 2X10 CPA BK A/12	334722045	A-BLACK	GCP	PLR	CPA	M	R	1	2	3	4	5	-	-	-	-	-	SALEABLE		N/A	N/A	N/A	N/A
								-	-	13	14	-	-	-	-	-	20						
MX150 ASSY RCP 2X10 CPA BK A/9	334722046	A-BLACK	GCP	PLR	CPA	M	R	1	2	3	4	5	-	-	-	-	-	SALEABLE		N/A	N/A	N/A	N/A
								-	-	13	14	15	16	17	-	-	20						
MX150 ASSY RCP 2X10 CPA BK A/13	334722047	A-BLACK	GCP	PLR	CPA	M	R	-	-	3	4	5	-	-	-	-	-	SALEABLE		N/A	N/A	N/A	N/A
								-	-	-	-	15	16	17	-	-	20						
MX150 ASSY RCP 2X10 CPA BK A/16	334722048	A-BLACK	GCP	PLR	CPA	M	R	-	-	3	4	5	-	-	-	-	-	SALEABLE		N/A	N/A	N/A	N/A
								-	-	-	-	-	-	-	-	-	20						
MX150 ASSY RCP 2X10 CPA BK A/14	334722049	A-BLACK	GCP	PLR	CPA	M	R	-	-	3	4	5	-	-	-	-	-	SALEABLE		N/A	N/A	N/A	N/A
								-	-	13	14	-	-	-	-	-	20						
MX150 ASSY RCP 2X10 CPA BK A/11	334722050	A-BLACK	GCP	PLR	CPA	M	R	-	-	3	4	5	-	-	-	-	-	SALEABLE		N/A	N/A	N/A	N/A
								-	-	13	14	15	16	17	-	-	20						
MX150 ASSY RCP 2X10 CPA BK A/11	334722051	A-BLACK	GCP	PLR	CPA	M	R	1	2	3	-	-	-	-	-	-	-	SALEABLE		N/A	N/A	N/A	N/A
								-	-	13	14	15	16	17	-	-	20						
MX150 ASSY RCP 2X10 CPA BK A/14	334722052	A-BLACK	GCP	PLR	CPA	M	R	1	2	3	-	-	-	-	-	-	-	SALEABLE		N/A	N/A	N/A	N/A
								-	-	13	14	-	-	-	-	-	20						
MX150 ASSY RCP 2X10 CPA BK A/13	334722053	A-BLACK	GCP	PLR	CPA	M	R	1	2	3	-	-	-	-	-	-	-	SALEABLE		N/A	N/A	N/A	N/A
								-	-	-	-	15	16	17	-	-	20						
MX150 ASSY RCP 2X10 CPA BK A/16	334722054	A-BLACK	GCP	PLR	CPA	M	R	1	2	3	-	-	-	-	-	-	-	SALEABLE		N/A	N/A	N/A	N/A
								-	-	-	-	-	-	-	-	-	20						
MX150 ASSY RCP 2X10 CPA BK A/16	334722055	A-BLACK	GCP	PLR	CPA	M	R	-	-	3	-	-	-	-	-	-	-	SALEABLE		N/A	N/A	N/A	N/A
								-	-	13	14	-	-	-	-	-	20						
MX150 ASSY RCP 2X10 CPA BK A/18	334722056	A-BLACK	GCP	PLR	CPA	M	R	-	-	3	-	-	-	-	-	-	-	SALEABLE		N/A	N/A	N/A	N/A
								-	-	-	-	-	-	-	-	-	20						
MX150 ASSY RCP 2X10 BK A/14	334722057	A-BLACK	GCP	PLR		M	R	-	-	3	4	-	-	-	-	-	10	SALEABLE		N/A	N/A	N/A	N/A
								-	-	-	14	-	-	17	-	19	-						
MX150 ASSY RCP 2X10 CPA BK A/16	334722058	A-BLACK	GCP	PLR	CPA	M	R	-	-	-	-	-	-	-	-	-	-	SALEABLE		N/A	N/A	N/A	N/A
								-	-	13	14	15	-	-	-	-	20						
MX150 ASSY RCP 2X10 BK A/16	334722059	A-BLACK	GCP	PLR		M	R	-	-	-	-	-	-	-	-	-	10	SALEABLE		N/A	N/A	N/A	N/A
								-	-	-	14	-	-	17	-	19	-						
MX150 ASSY RCP 2X10 DG C/20	334722060	C-DARK GRAY	GCO	PLR		M	R	-	-	-	-	-	-	-	-	-	-	SALEABLE		N/A	N/A	N/A	N/A
								-	-	-	-	-	-	-	-	-	-						
MX150 ASSY RCP 2X10 SG D/20	334722061	D-STONE GRAY	GCO	PLR		M	R	-	-	-	-	-	-	-	-	-	-	SALEABLE		N/A	N/A	N/A	N/A
								-	-	-	-	-	-	-	-	-	-						
MX150 ASSY RCP 2X10 CPA DG C/20	334722062	C-DARK GRAY	GCO	PLR	CPA	M	R	-	-	-	-	-	-	-	-	-	-	SALEABLE		N/A	N/A	N/A	N/A
								-	-	-	-	-	-	-	-	-	-						
MX150 ASSY RCP 2X10 CPA SG D/20	334722063	D-STONE GRAY	GCO	PLR	CPA	M	R	-	-	-	-	-	-	-	-	-	-	SALEABLE		N/A	N/A	N/A	N/A
								-	-	-	-	-	-	-	-	-	-						
MX150 ASSY RCP 2X10 BK A/15	334722064	A-BLACK	GCP	PLR		M	R	-	-	-	-	-	-	-	-	-	10	SALEABLE		N/A	N/A	N/A	N/A
								-	-	-	14	-	-	17	18	19	-						
MX150 ASSY RCP 2X10 BK A/13	334722065	A-BLACK	GCP	PLR		M	R	-	-	3	-	-	-	-	-	-	10	SALEABLE		N/A	N/A	N/A	N/A
								-	-	13	14	-	-	17	18	19	-						
MX150 ASSY RCP 2X10 BK A/12	334722066	A-BLACK	GCP	PLR		M	R	-	-	3	-	-	-	-	-	-	10	SALEABLE		N/A	N/A	N/A	N/A
								-	-	13	14	-	-	17	18	19	20						
MX150 ASSY RCP 2X10 BK A/13	334722067	A-BLACK	GCP	PLR		M	R	-	-	-	4	5	-	-	-	-	10	SALEABLE		N/A	N/A	N/A	N/A
								-	-	-	14	15	-	17	-	19	-						
MX150 ASSY RCP 2X10 BK A/12	334722068	A-BLACK	GCP	PLR		M	R	-	-	-	4	5	-	-	-	-	10	SALEABLE		N/A	N/A	N/A	N/A
								-	-	-	14	15	-	17	18	19	-						
MX150 ASSY RCP 2X10 BK A/11	334722069	A-BLACK	GCP	PLR		M	R	-	-	-	4	5	-	-	-	-	10	SALEABLE		N/A	N/A	N/A	N/A
								-	-	-	14	15	-	17	18	19	20						

molex

MX150 RECEPTACLE 2X10 SEALED ASSEMBLY MAT SEAL
BOM AND PIN OUT SHEET

ASSEMBLY DESCRIPTION	ASSEMBLY PART NUMBER	COMPONENT						BLOCKED TERMINALS										STATUS	COMMENT	OPTIONAL ATTACHMENTS SOLD SEPARATELY			
		THE PRESENCE OF AN ABBREVIATION INDICATES THE PRESENCE OF THAT COMPONENT						CAVITY WITH A NUMBER INDICATES BLOCKED TERMINAL POSITION CAVITY WITHOUT A NUMBER INDICATES OPEN TERMINAL POSITION															
		HOUSING KEY/COLOR	GROMMET CAP	PLR	CPA	MAT SEAL	RING SEAL													BACKSHELL WITH RIBS	BACKSHELL WITHOUT RIBS	90^0 ADAPTOR WITH RIBS	90^0 ADAPTOR WITHOUT RIBS
MX150 ASSY RCP 2X10 BK A/10	334722070	A-BLACK	GCP	PLR		M	R	-	-	3	-	-	6	7	-	-	10	SALEABLE		N/A	N/A	N/A	N/A
								-	-	13	14	-	-	17	18	19	20						
MX150 ASSY RCP 2X10 BK A/17	334722071	A-BLACK	GCP	PLR		M	R	-	-	-	4	-	-	7	-	-	-	SALEABLE		N/A	N/A	N/A	N/A
								-	-	-	-	-	16	-	-	-	-						
MX150 ASSY RCP 2X10 BK A/8	334722072	A-BLACK	GCP	PLR		M	R	-	2	3	4	5	6	7	-	-	-	SALEABLE		N/A	N/A	N/A	N/A
								-	12	13	14	15	16	17	-	-	-						
MX150 ASSY RCP 2X10 BK A/13	334722073	A-BLACK	GCP	PLR		M	R	-	-	3	4	5	-	-	-	-	-	SALEABLE		N/A	N/A	N/A	N/A
								-	-	13	-	15	-	-	18	19	-						
MX150 ASSY RCP 2X10 BK A/14	334722074	A-BLACK	GCP	PLR		M	R	-	-	-	4	5	6	7	-	-	-	SALEABLE		N/A	N/A	N/A	N/A
								-	-	-	-	-	16	17	-	-	-						
MX150 ASSY RCP 2X10 BK A/8	334722075	A-BLACK	GCP	PLR		M	R	1	2	3	4	5	6	-	8	-	10	SALEABLE		N/A	N/A	N/A	N/A
								-	-	-	-	-	-	17	18	19	20						
MX150 ASSY RCP 2X10 BK A/16	334722076	A-BLACK	GCP	PLR		M	R	-	-	-	-	-	-	-	-	-	-	SALEABLE		N/A	N/A	N/A	N/A
								-	-	-	-	-	-	17	18	19	20						
MX150 ASSY RCP 2X10 BK A/5	334722077	A-BLACK	GCP	PLR		M	R	1	2	3	4	5	6	7	8	9	10	SALEABLE		N/A	N/A	N/A	N/A
								-	-	-	-	-	16	17	18	19	20						
MX150 ASSY RCP 2X10 BK A/7	334722078	A-BLACK	GCP	PLR		M	R	1	2	3	4	5	6	-	8	-	10	SALEABLE		N/A	N/A	N/A	N/A
								-	-	-	-	-	16	17	18	19	20						
MX150 ASSY RCP 2X10 BK A/13	334722079	A-BLACK	GCP	PLR		M	R	-	2	-	-	-	-	-	8	-	-	SALEABLE		N/A	N/A	N/A	N/A
								-	-	-	-	-	16	17	18	19	20						
MX150 ASSY RCP 2X10 BK A/15	334722080	A-BLACK	GCP	PLR		M	R	-	-	-	-	-	-	-	-	-	-	SALEABLE		N/A	N/A	N/A	N/A
								-	-	-	-	-	16	17	18	19	20						
MX150 ASSY RCP 2X10 BK A/6	334722081	A-BLACK	GCP	PLR		M	R	1	2	3	4	5	6	7	8	9	10	SALEABLE		N/A	N/A	N/A	N/A
								-	-	-	-	-	-	17	18	19	20						
MX150 ASSY RCP 2X10 BK A/14	334722082	A-BLACK	GCP	PLR		M	R	-	-	-	-	-	-	7	-	9	-	SALEABLE		N/A	N/A	N/A	N/A
								-	-	-	-	-	-	17	18	19	20						
MX150 ASSY RCP 2X10 BK A/17	334722083	A-BLACK	GCP	PLR		M	R	-	-	-	-	-	-	-	-	-	10	SALEABLE		N/A	N/A	N/A	N/A
								-	-	-	-	-	-	17	-	19	-						
MX150 ASSY RCP 2X10 BK A/9	334722084	A-BLACK	GCP	PLR		M	R	1	2	3	4	5	6	7	8	-	10	SALEABLE		N/A	N/A	N/A	N/A
								-	-	-	-	-	-	17	-	19	-						
MX150 ASSY RCP 2X10 BK A/7	334722085	A-BLACK	GCP	PLR		M	R	1	2	3	4	5	6	7	8	9	10	SALEABLE		N/A	N/A	N/A	N/A
								-	12	-	-	-	-	17	-	19	-						
MX150 ASSY RCP 2X10 BK A/4	334722086	A-BLACK	GCP	PLR		M	R	1	2	3	4	5	6	7	8	9	10	SALEABLE		N/A	N/A	N/A	N/A
								-	-	-	14	15	-	17	18	19	20						
MX150 ASSY RCP 2X10 BK A/12	334722087	A-BLACK	GCP	PLR		M	R	-	-	-	-	-	-	7	-	9	-	SALEABLE		N/A	N/A	N/A	N/A
								-	-	-	14	15	-	17	18	19	20						
MX150 ASSY RCP 2X10 BK A/17	334722088	A-BLACK	GCP	PLR		M	R	-	-	-	-	-	-	7	-	-	-	SALEABLE		N/A	N/A	N/A	N/A
								-	-	-	-	-	-	17	-	-	20						
MX150 ASSY RCP 2X10 CPA YW A/20	334722089	A-YELLOW	GCO	PLR	CPA	M	R	-	-	-	-	-	-	-	-	-	-	SALEABLE		N/A	N/A	N/A	N/A
								-	-	-	-	-	-	-	-	-	-						
MX150 ASSY RCP 2X10 BK A/19	334722090	A-BLACK	GCP	PLR		M	R	-	-	-	-	-	-	-	-	-	-	SALEABLE		N/A	N/A	N/A	N/A
								-	-	-	-	-	-	-	-	-	20						
MX150 ASSY RCP 2X10 BK A/17	334722091	A-BLACK	GCP	PLR		M	R	-	2	-	-	-	-	-	-	-	-	SALEABLE		N/A	N/A	N/A	N/A
								-	-	-	-	15	16	-	-	-	-						
MX150 ASSY RCP 2X10 CPA BK A/18	334722092	A-BLACK	GCP	PLR	CPA	M	R	-	-	-	-	-	-	7	-	-	-	SALEABLE		N/A	N/A	N/A	N/A
								-	-	-	-	-	16	-	-	-	-						
MX150 ASSY RCP 2X10 YW A/20	334722093	A-YELLOW	GCO	PLR		M	R	-	-	-	-	-	-	-	-	-	-	SALEABLE		N/A	N/A	N/A	N/A
								-	-	-	-	-	-	-	-	-	-						
MX150 ASSY RCP 2X10 BK A/9	334722094	A-BLACK	GCP	PLR		M	R	-	-	-	4	-	-	-	-	-	10	SALEABLE		N/A	N/A	N/A	N/A
								11	12	13	14	15	16	-	18	19	20						
MX150 ASSY RCP 2X10 CPA BK A/18	334722095	A-BLACK	GCP	PLR	CPA	M	R	-	-	-	-	-	-	-	-	-	-	SALEABLE		N/A	N/A	N/A	N/A
								-	-	-	-	-	-	-	18	19	-						
MX150 ASSY RCP 2X10 CPA BK A/15	334722096	A-BLACK	GCP	PLR	CPA	M	R	-	2	-	4	-	-	-	-	-	-	SALEABLE		N/A	N/A	N/A	N/A
								11	12	-	14	-	-	-	-	-	-						

molex

MX150 RECEPTACLE 2X10 SEALED ASSEMBLY MAT SEAL
BOM AND PIN OUT SHEET

ASSEMBLY DESCRIPTION	ASSEMBLY PART NUMBER	COMPONENT: THE PRESENCE OF AN ABBREVIATION INDICATES THE PRESENCE OF THAT COMPONENT						BLOCKED TERMINALS: CAVITY WITH A NUMBER INDICATES BLOCKED TERMINAL POSITION; CAVITY WITHOUT A NUMBER INDICATES OPEN TERMINAL POSITION										STATUS	COMMENT	OPTIONAL ATTACHMENTS SOLD SEPARATELY			
		HOUSING KEY/COLOR	GROMMET CAP	PLR	CPA	MAT SEAL	RING SEAL												BACKSHELL WITH RIBS	BACKSHELL WITHOUT RIBS	90^0 ADAPTOR WITH RIBS	90^0 ADAPTOR WITHOUT RIBS
MX150 ASSY RCP 2X10 CPA BK A/18	334722097	A-BLACK	GCP	PLR	CPA	M	R	-	-	-	-	-	-	-	-	9	10	SALEABLE		N/A	N/A	N/A	N/A
								-	-	-	-	-	-	-	-	-	-						
MX150 ASSY RCP 2X10 CPA BK A/12	334722098	A-BLACK	GCP	PLR	CPA	M	R	1	-	-	-	-	-	-	-	-	-	SALEABLE		N/A	N/A	N/A	N/A
								-	12	-	-	15	16	17	18	19	20						
MX150 ASSY RCP 2X10 CPA BK A/2	334722099	A-BLACK	GCP	PLR	CPA	M	R	1	2	3	4	5	6	7	8	9	-	SALEABLE		N/A	N/A	N/A	N/A
								11	12	13	14	15	16	-	18	19	20						
MX150 ASSY RCP 2X10 CPA BK A/11	334722100	A-BLACK	GCP	PLR	CPA	M	R	-	-	3	4	5	6	-	8	9	-	SALEABLE		N/A	N/A	N/A	N/A
								-	-	-	-	-	-	-	18	19	20						
MX150 ASSY RCP 2X10 CPA BK A/4	334722101	A-BLACK	GCP	PLR	CPA	M	R	1	2	3	4	5	6	-	-	-	-	SALEABLE		N/A	N/A	N/A	N/A
								11	12	13	14	15	16	17	18	19	20						
MX150 ASSY RCP 2X10 BK A/14	334722102	A-BLACK	GCP	PLR		M	R	-	-	-	-	-	-	-	-	-	10	SALEABLE		N/A	N/A	N/A	N/A
								-	-	-	14	-	-	17	18	19	20						
MX150 ASSY RCP 2X10 CPA BK A/11	334722103	A-BLACK	GCP	PLR	CPA	M	R	-	-	3	4	5	6	-	8	9	10	SALEABLE		N/A	N/A	N/A	N/A
								-	-	-	14	-	-	-	-	19	-						
MX150 ASSY RCP 2X10 CPA BK A/14	334722104	A-BLACK	GCP	PLR	CPA	M	R	-	-	3	-	-	-	-	8	9	-	SALEABLE		N/A	N/A	N/A	N/A
								-	-	-	-	-	-	-	18	19	20						
MX150 ASSY RCP 2X10 BK A/13	334722105	A-BLACK	GCP	PLR		M	R	-	-	-	-	-	-	-	-	9	-	SALEABLE		N/A	N/A	N/A	N/A
								-	-	13	14	-	-	17	18	19	20						
MX150 ASSY RCP 2X10 LG B/16	334722106	B-LIGHT GRAY	GCP	PLR		M	R	-	-	-	-	-	6	7	8	-	-	SALEABLE		N/A	N/A	N/A	N/A
								-	-	-	-	-	16	-	-	-	-						
MX150 ASSY RCP 2X10 LG B/18	334722107	B-LIGHT GRAY	GCP	PLR		M	R	-	-	-	-	-	-	-	8	-	-	SALEABLE		N/A	N/A	N/A	N/A
								-	-	-	-	-	16	-	-	-	-						
MX150 ASSY RCP 2X10 LG B/16	334722108	B-LIGHT GRAY	GCP	PLR		M	R	-	-	-	-	-	6	7	-	9	10	SALEABLE		N/A	N/A	N/A	N/A
								-	-	-	-	-	-	-	-	-	-						
MX150 ASSY RCP 2X10 LG B/14	334722109	B-LIGHT GRAY	GCP	PLR		M	R	-	-	3	-	5	6	7	-	9	10	SALEABLE		N/A	N/A	N/A	N/A
								-	-	-	-	-	-	-	-	-	-						
MX150 ASSY RCP 2X10 LG B/16	334722110	B-LIGHT GRAY	GCP	PLR		M	R	-	-	3	-	5	-	-	-	9	10	SALEABLE		N/A	N/A	N/A	N/A
								-	-	-	-	-	-	-	-	-	-						
MX150 ASSY RCP 2X10 LG B/15	334722111	B-LIGHT GRAY	GCP	PLR		M	R	-	-	3	4	5	-	-	-	9	10	SALEABLE		N/A	N/A	N/A	N/A
								-	-	-	-	-	-	-	-	-	-						
MX150 ASSY RCP 2X10 LG B/10	334722112	B-LIGHT GRAY	GCP	PLR		M	R	-	-	3	4	5	-	-	-	9	10	SALEABLE		N/A	N/A	N/A	N/A
								-	-	-	-	15	-	17	18	19	20						
MX150 ASSY RCP 2X10 LG B/8	334722113	B-LIGHT GRAY	GCP	PLR		M	R	-	-	3	4	5	6	7	-	9	10	SALEABLE		N/A	N/A	N/A	N/A
								-	-	-	-	15	-	17	18	19	20						
MX150 ASSY RCP 2X10 CPA LG B/11	334722114	B-LIGHT GRAY	GCP	PLR	CPA	M	R	-	-	3	4	5	6	-	8	9	10	SALEABLE		N/A	N/A	N/A	N/A
								-	-	-	14	-	-	-	-	19	-						
MX150 ASSY RCP 2X10 CPA YW A/9	334722115	A-YELLOW	GCP	PLR	CPA	M	R	-	-	3	-	-	6	7	8	9	10	SALEABLE		N/A	N/A	N/A	N/A
								11	12	13	14	-	-	-	18	-	-						
MX150 ASSY RCP 2X10 CPA YW A/11	334722116	A-YELLOW	GCP	PLR	CPA	M	R	-	-	3	-	-	6	7	8	9	10	SALEABLE		N/A	N/A	N/A	N/A
								-	12	13	14	-	-	-	-	-	-						
MX150 ASSY RCP 2X10 CPA YW A/15	334722117	A-YELLOW	GCP	PLR	CPA	M	R	-	-	3	-	-	-	7	-	-	10	SALEABLE		N/A	N/A	N/A	N/A
								-	-	-	14	15	-	-	-	-	-						
MX150 ASSY RCP 2X10 CPA YW A/2	334722118	A-YELLOW	GCP	PLR	CPA	M	R	-	-	3	4	5	6	7	8	9	10	SALEABLE		N/A	N/A	N/A	N/A
								11	12	13	14	15	16	17	18	19	20						
MX150 ASSY RCP 2X10 CPA YW A/7	334722119	A-YELLOW	GCP	PLR	CPA	M	R	-	-	3	4	5	6	7	8	9	10	SALEABLE		N/A	N/A	N/A	N/A
								11	12	13	14	-	-	-	18	-	-						
MX150 ASSY RCP 2X10 CPA YW A/14	334722120	A-YELLOW	GCP	PLR	CPA	M	R	-	-	3	-	-	-	7	8	9	10	SALEABLE		N/A	N/A	N/A	N/A
								-	-	-	14	-	-	-	-	-	-						
MX150 ASSY RCP 2X10 CPA BK A/10	334722121	A-BLACK	GCP	PLR	CPA	M	R	-	-	-	-	-	-	-	-	-	-	SALEABLE		N/A	N/A	N/A	N/A
								11	12	13	14	15	16	17	18	19	20						
MX150 ASSY RCP 2X10 CPA BK A/11	334722122	A-BLACK	GCP	PLR	CPA	M	R	-	2	3	4	5	-	-	-	-	-	SALEABLE		N/A	N/A	N/A	N/A
								-	-	-	14	-	-	17	18	19	20						
MX150 ASSY RCP 2X10 BK A/18	334722123	A-BLACK	GCP	PLR		M	R	-	-	-	-	-	-	-	8	-	-	SALEABLE		N/A	N/A	N/A	N/A
								-	-	-	-	15	-	-	-	-	-						

molex

MX150 RECEPTACLE 2X10 SEALED ASSEMBLY MAT SEAL
BOM AND PIN OUT SHEET

ASSEMBLY DESCRIPTION	ASSEMBLY PART NUMBER	COMPONENT THE PRESENCE OF AN ABBREVIATION INDICATES THE PRESENCE OF THAT COMPONENT						BLOCKED TERMINALS CAVITY WITH A NUMBER INDICATES BLOCKED TERMINAL POSITION CAVITY WITHOUT A NUMBER INDICATES OPEN TERMINAL POSITION										STATUS	COMMENT	OPTIONAL ATTACHMENTS SOLD SEPARATELY			
		HOUSING KEY/COLOR	GROMMET CAP	PLR	CPA	MAT SEAL	RING SEAL													BACKSHELL WITH RIBS	BACKSHELL WITHOUT RIBS	90^0 ADAPTOR WITH RIBS	90^0 ADAPTOR WITHOUT RIBS
MX150 ASSY RCP 2X10 BK A/17	334722124	A-BLACK	GCP	PLR		M	R	-	-	-	-	-	-	-	-	-	-	SALEABLE		N/A	N/A	N/A	N/A
								11	-	-	-	-	-	17	-	19	-						
MX150 ASSY RCP 2X10 BK A/9	334722125	A-BLACK	GCP	PLR		M	R	1	2	3	4	5	6	7	8	-	-	SALEABLE		N/A	N/A	N/A	N/A
								11	-	-	-	-	-	17	-	19	-						
MX150 ASSY RCP 2X10 CPA BK A/14	334722126	A-BLACK	GCP	PLR	CPA	M	R	1	-	-	-	-	-	-	8	9	-	SALEABLE		N/A	N/A	N/A	N/A
								11	-	-	-	-	-	-	-	19	20						
MX150 ASSY RCP 2X10 CPA BK A/15	334722127	A-BLACK	GCP	PLR	CPA	M	R	1	-	-	-	-	-	-	8	-	10	SALEABLE		N/A	N/A	N/A	N/A
								-	-	-	-	15	-	17	-	-	-						
MX150 ASSY RCP 2X10 BK A/15	334722128	A-BLACK	GCP	PLR		M	R	1	-	-	-	-	-	-	8	-	10	SALEABLE		N/A	N/A	N/A	N/A
								-	-	-	-	15	-	17	-	-	-						
MX150 ASSY RCP 2X10 BK A/14	334722129	A-BLACK	GCP	PLR		M	R	1	-	-	-	-	-	-	8	9	-	SALEABLE		N/A	N/A	N/A	N/A
								11	-	-	-	-	-	-	-	19	20						
MX150 ASSY RCP 2X10 CPA BK A/13	334722130	A-BLACK	GCP	PLR	CPA	M	R	1	-	-	-	-	-	-	8	-	10	SALEABLE		N/A	N/A	N/A	N/A
								-	-	13	14	15	-	17	-	-	-						
MX150 ASSY RCP 2X10 BK A/18	334722131	A-BLACK	GCP	PLR		M	R	-	-	-	4	-	-	-	-	-	-	SALEABLE		N/A	N/A	N/A	N/A
								-	-	-	14	-	-	-	-	-	-						
MX150 ASSY RCP 2X10 BK A/6	334722132	A-BLACK	GCP	PLR		M	R	-	-	-	4	5	6	7	8	9	10	SALEABLE		N/A	N/A	N/A	N/A
								-	-	-	14	15	16	17	18	19	20						
MX150 ASSY RCP 2X10 BK A/0	334722133	A-BLACK	GCP	PLR		M	R	1	2	3	4	5	6	7	8	9	10	SALEABLE		N/A	N/A	N/A	N/A
								11	12	13	14	15	16	17	18	19	20						
MX150 ASSY RCP 2X10 BK A/17	334722134	A-BLACK	GCP	PLR		M	R	1	-	-	-	-	-	-	-	9	-	SALEABLE		N/A	N/A	N/A	N/A
								-	12	-	-	-	-	-	-	-	-						
MX150 ASSY RCP 2X10 BK A/18	334722135	A-BLACK	GCP	PLR		M	R	1	-	-	-	-	-	-	-	-	-	SALEABLE		N/A	N/A	N/A	N/A
								-	-	-	-	-	-	-	-	19	-						
MX150 ASSY RCP 2X10 BK A/2	334722136	A-BLACK	GCP	PLR		M	R	1	2	3	4	5	6	7	8	9	10	SALEABLE		N/A	N/A	N/A	N/A
								11	12	13	14	15	16	-	-	19	20						
MX150 ASSY RCP 2X10 BK A/16	334722137	A-BLACK	GCP	PLR		M	R	1	-	-	-	-	-	-	-	-	-	SALEABLE		N/A	N/A	N/A	N/A
								-	12	13	-	-	-	-	-	19	-						
MX150 ASSY RCP 2X10 CPA BK A/12	334722138	A-BLACK	GCP	PLR	CPA	M	R	-	-	-	-	-	-	-	-	9	10	SALEABLE		N/A	N/A	N/A	N/A
								-	12	13	14	15	16	17	-	-	-						
MX150 ASSY RCP 2X10 BK A/8	334722139	A-BLACK	GCP	PLR		M	R	1	2	3	4	5	6	-	8	-	10	SALEABLE		N/A	N/A	N/A	N/A
								-	-	13	-	-	16	-	-	19	20						
MX150 ASSY RCP 2X10 BK A/14	334722140	A-BLACK	GCP	PLR		M	R	-	2	-	-	-	-	-	8	-	-	SALEABLE		N/A	N/A	N/A	N/A
								-	-	13	-	-	16	-	-	19	20						
MX150 ASSY RCP 2X10 BK A/16	334722141	A-BLACK	GCP	PLR		M	R	-	-	-	-	-	-	-	-	-	-	SALEABLE		N/A	N/A	N/A	N/A
								-	-	13	-	-	16	-	-	19	20						
MX150 ASSY RCP 2X10 LG B/9	334722142	B-LIGHT GRAY	GCP	PLR		M	R	1	2	3	4	5	6	7	8	-	-	SALEABLE		N/A	N/A	N/A	N/A
								11	-	-	-	-	-	17	-	19	-						
MX150 ASSY RCP 2X10 LG B/17	334722143	B-LIGHT GRAY	GCP	PLR		M	R	-	-	-	-	-	-	-	-	-	-	SALEABLE		N/A	N/A	N/A	N/A
								11	-	-	-	-	-	17	-	19	-						
MX150 ASSY RCP 2X10 BK A/11	334722144	A-BLACK	GCP	PLR		M	R	1	2	3	4	5	-	7	8	-	-	SALEABLE		N/A	N/A	N/A	N/A
								-	-	-	-	-	16	-	-	19	-						
MX150 ASSY RCP 2X10 BK A/13	334722145	A-BLACK	GCP	PLR		M	R	1	2	3	-	-	-	7	-	-	10	SALEABLE		N/A	N/A	N/A	N/A
								-	-	-	-	-	16	-	-	19	-						
MX150 ASSY RCP 2X10 CPA BK A/17	334722146	A-BLACK	GCP	PLR	CPA	M	R	1	-	-	-	-	-	-	-	9	-	SALEABLE		N/A	N/A	N/A	N/A
								-	12	-	-	-	-	-	-	-	-						
MX150 ASSY RCP 2X10 BK A/7	334722147	A-BLACK	GCP	PLR		M	R	1	2	3	4	5	-	7	8	-	-	SALEABLE		N/A	N/A	N/A	N/A
								-	-	13	14	15	16	-	-	19	20						
MX150 ASSY RCP 2X10 BK A/9	334722148	A-BLACK	GCP	PLR		M	R	1	2	3	-	-	-	7	-	-	10	SALEABLE		N/A	N/A	N/A	N/A
								-	-	13	14	15	16	-	-	19	20						
MX150 ASSY RCP 2X10 CPA BK A/17	334722149	A-BLACK	GCP	PLR	CPA	M	R	-	-	-	-	-	-	-	-	-	10	SALEABLE		N/A	N/A	N/A	N/A
								-	-	-	-	-	-	-	-	19	20						
MX150 ASSY RCP 2X10 CPA BK A/16	334722150	A-BLACK	GCP	PLR	CPA	M	R	-	-	-	-	-	-	7	-	9	10	SALEABLE		N/A	N/A	N/A	N/A
								-	-	-	-	-	16	-	-	-	-						

molex

MX150 RECEPTACLE 2X10 SEALED ASSEMBLY MAT SEAL
BOM AND PIN OUT SHEET

ASSEMBLY DESCRIPTION	ASSEMBLY PART NUMBER	COMPONENT: THE PRESENCE OF AN ABBREVIATION INDICATES THE PRESENCE OF THAT COMPONENT						BLOCKED TERMINALS: CAVITY WITH A NUMBER INDICATES BLOCKED TERMINAL POSITION; CAVITY WITHOUT A NUMBER INDICATES OPEN TERMINAL POSITION										STATUS	COMMENT	OPTIONAL ATTACHMENTS SOLD SEPARATELY			
		HOUSING KEY/COLOR	GROMMET CAP	PLR	CPA	MAT SEAL	RING SEAL													BACKSHELL WITH RIBS	BACKSHELL WITHOUT RIBS	90^0 ADAPTOR WITH RIBS	90^0 ADAPTOR WITHOUT RIBS
MX150 ASSY RCP 2X10 CPA BK A/8	334722151	A-BLACK	GCP	PLR	CPA	M	R	1	2	3	4	-	-	-	-	9	10	SALEABLE		N/A	N/A	N/A	N/A
								-	-	13	14	-	-	17	18	19	20						
MX150 ASSY RCP 2X10 BK A/7	334722152	A-BLACK	GCP	PLR		M	R	1	2	3	4	5	-	7	8	9	-	SALEABLE		N/A	N/A	N/A	N/A
								-	-	-	-	-	16	17	18	19	20						
MX150 ASSY RCP 2X10 BK A/11	334722153	A-BLACK	GCP	PLR		M	R	-	-	-	4	5	6	-	-	-	-	SALEABLE		N/A	N/A	N/A	N/A
								-	12	-	-	15	16	17	18	19	-						
MX150 ASSY RCP 2X10 BK A/11	334722154	A-BLACK	GCP	PLR		M	R	1	-	-	-	5	6	7	8	-	-	SALEABLE		N/A	N/A	N/A	N/A
								-	12	13	-	15	-	-	-	19	-						
MX150 ASSY RCP 2X10 CPA BK A/9	334722155	A-BLACK	GCP	PLR	CPA	M	R	1	2	3	4	5	6	-	-	-	-	SALEABLE		N/A	N/A	N/A	N/A
								-	-	-	-	-	16	17	18	19	20						
MX150 ASSY RCP 2X10 CPA BK A/15	334722156	A-BLACK	GCP	PLR	CPA	M	R	-	-	-	-	-	-	-	-	-	-	SALEABLE		N/A	N/A	N/A	N/A
								-	-	-	-	-	16	17	18	19	20						
MX150 ASSY RCP 2X10 CPA BK A/13	334722157	A-BLACK	GCP	PLR	CPA	M	R	-	-	-	-	-	-	-	-	9	-	SALEABLE		N/A	N/A	N/A	N/A
								-	-	13	14	-	-	17	18	19	20						
MX150 ASSY RCP 2X10 CPA BK A/8	334722158	A-BLACK	GCP	PLR	CPA	M	R	1	2	3	4	5	6	-	8	-	10	SALEABLE		N/A	N/A	N/A	N/A
								-	-	-	-	-	-	17	18	19	20						
MX150 ASSY RCP 2X10 CPA LG B/13	334722159	B-LIGHT GRAY	GCP	PLR	CPA	M	R	-	-	-	-	-	-	-	-	9	10	SALEABLE		N/A	N/A	N/A	N/A
								11	-	-	-	15	16	17	-	-	20						
MX150 ASSY RCP 2X10 CPA LG B/12	334722160	B-LIGHT GRAY	GCP	PLR	CPA	M	R	-	-	-	4	5	6	-	-	9	10	SALEABLE		N/A	N/A	N/A	N/A
								11	-	-	14	-	-	-	18	-	-						
MX150 ASSY RCP 2X10 CPA LG B/14	334722161	B-LIGHT GRAY	GCP	PLR	CPA	M	R	-	-	-	4	5	6	7	-	-	10	SALEABLE		N/A	N/A	N/A	N/A
								-	-	-	-	-	-	-	18	-	-						
MX150 ASSY RCP 2X10 CPA LG B/13	334722162	B-LIGHT GRAY	GCP	PLR	CPA	M	R	-	-	-	4	5	6	-	-	9	10	SALEABLE		N/A	N/A	N/A	N/A
								11	-	-	-	-	-	-	-	-	20						
MX150 ASSY RCP 2X10 CPA LG B/14	334722163	B-LIGHT GRAY	GCP	PLR	CPA	M	R	-	-	-	4	5	6	-	-	-	-	SALEABLE		N/A	N/A	N/A	N/A
								-	-	-	14	-	-	-	-	19	20						
MX150 ASSY RCP 2X10 CPA BK A/12	334722164	A-BLACK	GCP	PLR	CPA	M	R	-	-	-	-	-	-	-	-	9	10	SALEABLE		N/A	N/A	N/A	N/A
								-	-	13	14	-	-	17	18	19	20						
MX150 ASSY RCP 2X10 BK A/10	334722165	A-BLACK	GCP	PLR		M	R	-	-	3	4	5	6	-	-	-	-	SALEABLE		N/A	N/A	N/A	N/A
								-	12	-	-	15	16	17	18	19	-						
MX150 ASSY RCP 2X10 CPA BK A/17	334722167	A-BLACK	GCP	PLR	CPA	M	R	-	-	-	-	-	-	-	-	-	-	SALEABLE		N/A	N/A	N/A	N/A
								-	-	13	-	-	-	-	-	19	20						
MX150 ASSY RCP 2X10 BK A/15	334722168	A-BLACK	GCP	PLR		M	R	-	2	-	-	-	-	-	8	-	10	SALEABLE		N/A	N/A	N/A	N/A
								-	-	-	-	-	-	17	-	19	-						
MX150 ASSY RCP 2X10 BK A/19	334722169	A-BLACK	GCP	PLR		M	R	-	-	-	-	-	-	-	-	-	-	SALEABLE		N/A	N/A	N/A	N/A
								-	-	-	-	-	16	-	-	-	-						
MX150 ASSY RCP 2X10 BK A/10	334722170	A-BLACK	GCP	PLR		M	R	1	2	3	4	5	-	7	8	-	-	SALEABLE		N/A	N/A	N/A	N/A
								-	-	-	-	-	16	-	-	19	20						
MX150 ASSY RCP 2X10 BK A/12	334722171	A-BLACK	GCP	PLR		M	R	1	2	3	-	-	-	7	-	-	10	SALEABLE		N/A	N/A	N/A	N/A
								-	-	-	-	-	16	-	-	19	20						
MX150 ASSY RCP 2X10 BK A/6	334722172	A-BLACK	GCP	PLR		M	R	1	2	3	4	5	6	-	8	-	10	SALEABLE		N/A	N/A	N/A	N/A
								-	-	-	14	15	-	17	18	19	20						
MX150 ASSY RCP 2X10 BK A/14	334722173	A-BLACK	GCP	PLR		M	R	-	-	-	-	-	-	-	-	-	-	SALEABLE		N/A	N/A	N/A	N/A
								-	-	-	14	15	-	17	18	19	20						
MX150 ASSY RCP 2X10 BK A/14	334722174	A-BLACK	GCP	PLR		M	R	-	2	-	-	-	-	-	8	-	-	SALEABLE		N/A	N/A	N/A	N/A
								-	-	-	-	-	-	17	18	19	20						
MX150 ASSY RCP 2X10 BK A/8	334722175	A-BLACK	GCP	PLR		M	R	1	2	3	4	5	6	-	8	-	10	SALEABLE		N/A	N/A	N/A	N/A
								-	-	-	14	15	-	-	18	-	20						
MX150 ASSY RCP 2X10 BK A/10	334722176	A-BLACK	GCP	PLR		M	R	1	2	3	4	5	6	-	8	-	10	SALEABLE		N/A	N/A	N/A	N/A
								-	-	-	-	-	-	-	18	-	20						
MX150 ASSY RCP 2X10 BK A/16	334722177	A-BLACK	GCP	PLR		M	R	-	-	-	-	-	-	-	-	-	-	SALEABLE		N/A	N/A	N/A	N/A
								-	-	-	14	15	-	-	18	-	20						
MX150 ASSY RCP 2X10 BK A/18	334722178	A-BLACK	GCP	PLR		M	R	-	-	-	-	-	-	-	-	-	-	SALEABLE		N/A	N/A	N/A	N/A
								-	-	-	-	-	-	-	18	-	20						

molex

MX150 RECEPTACLE 2X10 SEALED ASSEMBLY MAT SEAL
BOM AND PIN OUT SHEET

ASSEMBLY DESCRIPTION	ASSEMBLY PART NUMBER	COMPONENT THE PRESENCE OF AN ABBREVIATION INDICATES THE PRESENCE OF THAT COMPONENT						BLOCKED TERMINALS CAVITY WITH A NUMBER INDICATES BLOCKED TERMINAL POSITION CAVITY WITHOUT A NUMBER INDICATES OPEN TERMINAL POSITION										STATUS	COMMENT	OPTIONAL ATTACHMENTS SOLD SEPARATELY			
		HOUSING KEY/COLOR	GROMMET CAP	PLR	CPA	MAT SEAL	RING SEAL													BACKSHELL WITH RIBS	BACKSHELL WITHOUT RIBS	90^0 ADAPTOR WITH RIBS	90^0 ADAPTOR WITHOUT RIBS
MX150 ASSY RCP 2X10 BK A/12	334722179	A-BLACK	GCP	PLR		M	R	1	2	3	4	5	6	-	-	-	-	SALEABLE		N/A	N/A	N/A	N/A
								-	-	-	-	-	-	-	-	19	20						
MX150 ASSY RCP 2X10 BK A/18	334722180	A-BLACK	GCP	PLR		M	R	-	-	-	-	-	6	-	-	-	-	SALEABLE		N/A	N/A	N/A	N/A
								-	-	-	-	-	-	-	-	-	20						
MX150 ASSY RCP 2X10 CPA BK A/10	334722181	A-BLACK	GCP	PLR	CPA	M	R	1	-	3	-	5	-	7	-	9	-	SALEABLE		N/A	N/A	N/A	N/A
								-	12	-	14	-	16	-	18	-	20						
MX150 ASSY RCP 2X10 CPA BK A/10	334722182	A-BLACK	GCP	PLR	CPA	M	R	-	2	-	4	-	6	-	8	-	10	SALEABLE		N/A	N/A	N/A	N/A
								11	-	13	-	15	-	17	-	19	-						
MX150 ASSY RCP 2X10 BK A/17	334722183	A-BLACK	GCP	PLR		M	R	-	-	-	-	-	-	-	-	-	-	SALEABLE		N/A	N/A	N/A	N/A
								-	-	-	14	15	16	-	-	-	-						
MX150 ASSY RCP 2X10 BK A/17	334722184	A-BLACK	GCP	PLR		M	R	-	2	-	-	-	-	-	8	-	-	SALEABLE		N/A	N/A	N/A	N/A
								-	-	-	-	-	16	-	-	-	-						
MX150 ASSY RCP 2X10 BK A/11	334722185	A-BLACK	GCP	PLR		M	R	1	2	3	4	5	6	-	8	-	10	SALEABLE		N/A	N/A	N/A	N/A
								-	-	-	-	-	16	-	-	-	-						
MX150 ASSY RCP 2X10 BK A/15	334722186	A-BLACK	GCP	PLR		M	R	-	2	-	-	-	-	-	8	-	-	SALEABLE		N/A	N/A	N/A	N/A
								-	-	-	14	15	16	-	-	-	-						
MX150 ASSY RCP 2X10 BK A/9	334722187	A-BLACK	GCP	PLR		M	R	1	2	3	4	5	6	-	8	-	10	SALEABLE		N/A	N/A	N/A	N/A
								-	-	-	14	15	16	-	-	-	-						
MX150 ASSY RCP 2X10 BK A/13	334722188	A-BLACK	GCP	PLR		M	R	-	-	-	-	-	-	-	-	-	-	SALEABLE		N/A	N/A	N/A	N/A
								-	-	-	14	15	16	17	18	19	20						
MX150 ASSY RCP 2X10 BK A/13	334722189	A-BLACK	GCP	PLR		M	R	-	2	-	-	-	-	-	8	-	-	SALEABLE		N/A	N/A	N/A	N/A
								-	-	-	-	-	16	17	18	19	20						
MX150 ASSY RCP 2X10 BK A/5	334722190	A-BLACK	GCP	PLR		M	R	1	2	3	4	5	6	-	8	-	10	SALEABLE		N/A	N/A	N/A	N/A
								-	-	-	14	15	16	17	18	19	20						
MX150 ASSY RCP 2X10 CPA BK A/17	334722191	A-BLACK	GCP	PLR	CPA	M	R	-	-	-	-	-	-	7	-	9	-	SALEABLE		N/A	N/A	N/A	N/A
								-	-	-	-	-	16	-	-	-	-						
MX150 ASSY RCP 2X10 BK A/15	334722192	A-BLACK	GCP	PLR		M	R	-	-	-	-	-	-	-	-	-	10	SALEABLE		N/A	N/A	N/A	N/A
								-	-	-	14	15	-	17	-	19	-						
MX150 ASSY RCP 2X10 BK A/11	334722193	A-BLACK	GCP	PLR		M	R	-	2	-	-	-	-	-	8	-	-	SALEABLE		N/A	N/A	N/A	N/A
								-	-	-	14	15	16	17	18	19	20						
MX150 ASSY RCP 2X10 BK A/6	334722194	A-BLACK	GCP	PLR		M	R	-	-	3	4	5	6	7	8	9	10	SALEABLE		N/A	N/A	N/A	N/A
								-	-	13	14	-	-	17	18	19	20						
MX150 ASSY RCP 2X10 BK A/7	334722195	A-BLACK	GCP	PLR		M	R	-	-	3	4	5	6	7	8	9	10	SALEABLE		N/A	N/A	N/A	N/A
								-	-	13	14	-	-	17	18	19	-						
MX150 ASSY RCP 2X10 BK A/18	334722196	A-BLACK	GCP	PLR		M	R	-	-	-	-	-	-	-	-	-	-	SALEABLE		N/A	N/A	N/A	N/A
								-	-	-	-	-	16	-	-	-	20						
MX150 ASSY RCP 2X10 BK A/16	334722197	A-BLACK	GCP	PLR		M	R	-	-	-	-	-	-	7	-	-	-	SALEABLE		N/A	N/A	N/A	N/A
								-	12	-	-	-	-	17	-	-	20						
MX150 ASSY RCP 2X10 BK A/14	334722198	A-BLACK	GCP	PLR		M	R	-	-	3	-	-	-	-	-	-	-	SALEABLE		N/A	N/A	N/A	N/A
								-	-	-	-	-	16	17	18	19	20						
MX150 ASSY RCP 2X10 BK A/18	334722199	A-BLACK	GCP	PLR		M	R	-	2	-	-	-	-	-	8	-	-	SALEABLE		N/A	N/A	N/A	N/A
								-	-	-	-	-	-	-	-	-	-						
MX150 ASSY RCP 2X10 BK A/10	334722200	A-BLACK	GCP	PLR		M	R	1	2	3	4	5	6	-	8	-	10	SALEABLE		N/A	N/A	N/A	N/A
								-	-	-	14	15	-	-	-	-	-						
MX150 ASSY RCP 2X10 BK A/16	334722201	A-BLACK	GCP	PLR		M	R	-	2	-	-	-	-	-	8	-	-	SALEABLE		N/A	N/A	N/A	N/A
								-	-	-	14	15	-	-	-	-	-						
MX150 ASSY RCP 2X10 BK A/18	334722202	A-BLACK	GCP	PLR		M	R	-	-	-	-	-	-	-	-	-	-	SALEABLE		N/A	N/A	N/A	N/A
								-	-	-	14	15	-	-	-	-	-						
MX150 ASSY RCP 2X10 LG B/14	334722203	B-LIGHT GRAY	GCP	PLR		M	R	-	2	3	-	-	-	-	-	9	-	SALEABLE		N/A	N/A	N/A	N/A
								-	12	13	-	-	-	-	-	19	-						
MX150 ASSY RCP 2X10 LG B/5	334722204	B-LIGHT GRAY	GCP	PLR		M	R	1	2	3	4	5	-	-	8	9	10	SALEABLE		N/A	N/A	N/A	N/A
								-	12	13	14	15	-	-	18	19	20						
MX150 ASSY RCP 2X10 CPA LG B/15	334722205	B-LIGHT GRAY	GCP	PLR	CPA	M	R	-	-	-	-	-	-	-	-	-	-	SALEABLE		N/A	N/A	N/A	N/A
								11	-	-	-	15	16	17	-	-	20						

molex

MX150 RECEPTACLE 2X10 SEALED ASSEMBLY MAT SEAL
BOM AND PIN OUT SHEET

ASSEMBLY DESCRIPTION	ASSEMBLY PART NUMBER	COMPONENT						BLOCKED TERMINALS										STATUS	COMMENT	OPTIONAL ATTACHMENTS SOLD SEPARATELY			
		THE PRESENCE OF AN ABBREVIATION INDICATES THE PRESENCE OF THAT COMPONENT						CAVITY WITH A NUMBER INDICATES BLOCKED TERMINAL POSITION CAVITY WITHOUT A NUMBER INDICATES OPEN TERMINAL POSITION															
		HOUSING KEY/COLOR	GROMMET CAP	PLR	CPA	MAT SEAL	RING SEAL													BACKSHELL WITH RIBS	BACKSHELL WITHOUT RIBS	90^0 ADAPTOR WITH RIBS	90^0 ADAPTOR WITHOUT RIBS
MX150 ASSY RCP 2X10 CPA LG B/16	334722206	B-LIGHT GRAY	GCP	PLR	CPA	M	R	-	-	-	-	-	-	-	-	-	-	SALEABLE		N/A	N/A	N/A	N/A
								11	-	-	-	15	16	17	-	-	-						
MX150 ASSY RCP 2X10 BK A/17	334722207	A-BLACK	GCP	PLR		M	R	-	-	-	-	5	-	-	-	-	10	SALEABLE		N/A	N/A	N/A	N/A
								-	-	-	-	-	-	-	-	-	20						
MX150 ASSY RCP 2X10 BK A/15	334722208	A-BLACK	GCP	PLR		M	R	-	-	-	-	5	-	-	-	-	10	SALEABLE		N/A	N/A	N/A	N/A
								-	-	-	-	-	-	-	18	19	20						
MX150 ASSY RCP 2X10 BK A/19	334722209	A-BLACK	GCP	PLR		M	R	-	-	-	-	5	-	-	-	-	-	SALEABLE		N/A	N/A	N/A	N/A
								-	-	-	-	-	-	-	-	-	-						
MX150 ASSY RCP 2X10 BK A/18	334722210	A-BLACK	GCP	PLR		M	R	-	-	-	-	-	-	-	-	-	10	SALEABLE		N/A	N/A	N/A	N/A
								-	-	-	-	-	-	-	-	-	20						
MX150 ASSY RCP 2X10 BK A/15	334722211	A-BLACK	GCP	PLR		M	R	-	-	3	4	5	-	-	-	-	10	SALEABLE		N/A	N/A	N/A	N/A
								-	-	-	-	-	-	-	-	-	20						
MX150 ASSY RCP 2X10 BK A/17	334722212	A-BLACK	GCP	PLR		M	R	-	-	3	4	5	-	-	-	-	-	SALEABLE		N/A	N/A	N/A	N/A
								-	-	-	-	-	-	-	-	-	-						
MX150 ASSY RCP 2X10 BK A/12	334722213	A-BLACK	GCP	PLR		M	R	-	-	3	4	-	-	-	8	9	10	SALEABLE		N/A	N/A	N/A	N/A
								-	12	13	-	-	-	-	-	-	20						
MX150 ASSY RCP 2X10 BK A/16	334722214	A-BLACK	GCP	PLR		M	R	-	-	3	4	-	-	-	-	-	10	SALEABLE		N/A	N/A	N/A	N/A
								-	-	-	-	-	-	-	-	-	20						
MX150 ASSY RCP 2X10 BK A/18	334722215	A-BLACK	GCP	PLR		M	R	-	-	3	4	-	-	-	-	-	-	SALEABLE		N/A	N/A	N/A	N/A
								-	-	-	-	-	-	-	-	-	-						
MX150 ASSY RCP 2X10 LG B/7	334722216	B-LIGHT GRAY	GCP	PLR		M	R	1	2	3	4	5	6	7	8	-	-	SALEABLE		N/A	N/A	N/A	N/A
								11	12	13	-	-	-	17	-	19	-						
MX150 ASSY RCP 2X10 LG B/15	334722217	B-LIGHT GRAY	GCP	PLR		M	R	-	-	-	-	-	-	-	-	-	-	SALEABLE		N/A	N/A	N/A	N/A
								11	12	13	-	-	-	17	-	19	-						
MX150 ASSY RCP 2X10 BK A/15	334722218	A-BLACK	GCP	PLR		M	R	-	-	-	4	5	-	-	8	-	-	SALEABLE		N/A	N/A	N/A	N/A
								-	-	-	-	-	16	-	-	-	20						
MX150 ASSY RCP 2X10 BK A/15	334722219	A-BLACK	GCP	PLR		M	R	-	-	-	-	-	-	-	-	-	10	SALEABLE		N/A	N/A	N/A	N/A
								11	12	-	-	-	16	-	-	-	20						
MX150 ASSY RCP 2X10 BK A/12	334722220	A-BLACK	GCP	PLR		M	R	1	2	3	4	5	-	-	8	-	-	SALEABLE		N/A	N/A	N/A	N/A
								-	-	-	-	-	16	-	-	-	20						
MX150 ASSY RCP 2X10 BK A/12	334722221	A-BLACK	GCP	PLR		M	R	1	2	3	-	-	-	-	-	-	10	SALEABLE		N/A	N/A	N/A	N/A
								11	12	-	-	-	16	-	-	-	20						
MX150 ASSY RCP 2X10 BK A/17	334722222	A-BLACK	GCP	PLR		M	R	-	2	3	-	-	6	-	-	-	-	SALEABLE		N/A	N/A	N/A	N/A
								-	-	-	-	-	-	-	-	-	-						
MX150 ASSY RCP 2X10 BK A/16	334722223	A-BLACK	GCP	PLR		M	R	-	2	3	-	-	-	-	-	-	-	SALEABLE		N/A	N/A	N/A	N/A
								-	-	-	-	-	-	17	18	-	-						
MX150 ASSY RCP 2X10 BK A/15	334722224	A-BLACK	GCP	PLR		M	R	1	2	3	-	-	6	7	-	-	-	SALEABLE		N/A	N/A	N/A	N/A
								-	-	-	-	-	-	-	-	-	-						
MX150 ASSY RCP 2X10 BK A/12	334722225	A-BLACK	GCP	PLR		M	R	1	2	3	4	5	6	-	8	-	10	SALEABLE		N/A	N/A	N/A	N/A
								-	-	-	-	-	-	-	-	-	-						
MX150 ASSY RCP 2X10 BK A/17	334722226	A-BLACK	GCP	PLR		M	R	-	-	-	-	-	-	7	-	-	-	SALEABLE		N/A	N/A	N/A	N/A
								-	12	-	-	-	16	-	-	-	-						
MX150 ASSY RCP 2X10 BK A/4	334722227	A-BLACK	GCP	PLR		M	R	1	2	3	4	5	6	7	8	-	-	SALEABLE		N/A	N/A	N/A	N/A
								-	12	13	14	15	-	17	18	19	20						
MX150 ASSY RCP 2X10 BK A/8	334722228	A-BLACK	GCP	PLR		M	R	1	2	3	4	5	6	7	8	-	-	SALEABLE		N/A	N/A	N/A	N/A
								-	-	-	-	-	-	17	18	19	20						
MX150 ASSY RCP 2X10 BK A/12	334722229	A-BLACK	GCP	PLR		M	R	-	-	-	-	-	-	-	-	-	-	SALEABLE		N/A	N/A	N/A	N/A
								-	12	13	14	15	-	17	18	19	20						
MX150 ASSY RCP 2X10 BK A/12	334722230	A-BLACK	GCP	PLR		M	R	-	-	-	-	-	-	-	-	9	10	SALEABLE		N/A	N/A	N/A	N/A
								11	-	-	-	-	16	17	18	19	20						
MX150 ASSY RCP 2X10 BK A/4	334722231	A-BLACK	GCP	PLR		M	R	1	2	3	4	5	6	7	8	9	10	SALEABLE		N/A	N/A	N/A	N/A
								11	-	-	-	-	16	17	18	19	20						
MX150 ASSY RCP 2X10 BK A/8	334722232	A-BLACK	GCP	PLR		M	R	-	-	-	-	-	-	-	-	9	10	SALEABLE		N/A	N/A	N/A	N/A
								11	12	13	14	15	16	17	18	19	20						

molex

MX150 RECEPTACLE 2X10 SEALED ASSEMBLY MAT SEAL
BOM AND PIN OUT SHEET

ASSEMBLY DESCRIPTION	ASSEMBLY PART NUMBER	COMPONENT: THE PRESENCE OF AN ABBREVIATION INDICATES THE PRESENCE OF THAT COMPONENT						BLOCKED TERMINALS: CAVITY WITH A NUMBER INDICATES BLOCKED TERMINAL POSITION, CAVITY WITHOUT A NUMBER INDICATES OPEN TERMINAL POSITION										STATUS	COMMENT	OPTIONAL ATTACHMENTS SOLD SEPARATELY			
		HOUSING KEY/COLOR	GROMMET CAP	PLR	CPA	MAT SEAL	RING SEAL													BACKSHELL WITH RIBS	BACKSHELL WITHOUT RIBS	90^0 ADAPTOR WITH RIBS	90^0 ADAPTOR WITHOUT RIBS
MX150 ASSY RCP 2X10 BK A/16	334722233	A-BLACK	GCP	PLR		M	R	-	-	-	-	-	-	-	-	-	-	SALEABLE		N/A	N/A	N/A	N/A
								-	-	-	-	-	-	17	18	19	20						
MX150 ASSY RCP 2X10 BK A/17	334722234	A-BLACK	GCP	PLR		M	R	-	2	3	-	-	6	-	-	-	-	SALEABLE		N/A	N/A	N/A	N/A
								-	-	-	-	-	-	-	-	-	-						
MX150 ASSY RCP 2X10 BK A/15	334722235	A-BLACK	GCP	PLR		M	R	-	2	3	-	-	6	-	-	-	-	SALEABLE		N/A	N/A	N/A	N/A
								-	-	-	-	-	-	17	18	-	-						
MX150 ASSY RCP 2X10 BK A/13	334722236	A-BLACK	GCP	PLR		M	R	-	-	3	4	5	6	7	-	-	10	SALEABLE		N/A	N/A	N/A	N/A
								-	-	-	-	-	-	-	-	-	20						
MX150 ASSY RCP 2X10 BK A/10	334722237	A-BLACK	GCP	PLR		M	R	-	-	3	4	-	6	7	8	9	10	SALEABLE		N/A	N/A	N/A	N/A
								-	12	13	-	-	-	-	-	-	20						
MX150 ASSY RCP 2X10 BK A/14	334722238	A-BLACK	GCP	PLR		M	R	-	-	3	4	-	6	7	-	-	10	SALEABLE		N/A	N/A	N/A	N/A
								-	-	-	-	-	-	-	-	-	20						
MX150 ASSY RCP 2X10 BK A/13	334722239	A-BLACK	GCP	PLR		M	R	-	-	3	4	5	6	7	-	-	-	SALEABLE		N/A	N/A	N/A	N/A
								-	12	13	-	-	-	-	-	-	-						
MX150 ASSY RCP 2X10 BK A/17	334722240	A-BLACK	GCP	PLR		M	R	-	-	-	-	5	-	-	-	-	-	SALEABLE		N/A	N/A	N/A	N/A
								-	-	-	-	-	-	-	18	19	-						
MX150 ASSY RCP 2X10 BK A/16	334722241	A-BLACK	GCP	PLR		M	R	-	-	3	4	-	6	7	-	-	-	SALEABLE		N/A	N/A	N/A	N/A
								-	-	-	-	-	-	-	-	-	-						
MX150 ASSY RCP 2X10 BK A/15	334722242	A-BLACK	GCP	PLR		M	R	-	-	-	-	5	6	7	-	-	-	SALEABLE		N/A	N/A	N/A	N/A
								-	-	-	-	15	16	-	-	-	-						
MX150 ASSY RCP 2X10 LG B/10	334722243	B-LIGHT GRAY	GCP	PLR		M	R	-	2	3	-	-	6	-	-	9	10	SALEABLE		N/A	N/A	N/A	N/A
								-	12	13	-	-	16	-	-	19	20						
MX150 ASSY RCP 2X10 LG B/9	334722244	B-LIGHT GRAY	GCP	PLR		M	R	-	2	3	-	-	6	-	-	9	10	SALEABLE		N/A	N/A	N/A	N/A
								-	12	13	-	-	16	-	18	19	20						
MX150 ASSY RCP 2X10 LG B/13	334722245	B-LIGHT GRAY	GCP	PLR		M	R	-	2	3	-	-	-	-	-	9	-	SALEABLE		N/A	N/A	N/A	N/A
								-	12	13	-	-	-	-	18	19	-						
MX150 ASSY RCP 2X10 LG B/9	334722246	B-LIGHT GRAY	GCP	PLR		M	R	1	2	3	-	-	-	-	8	9	10	SALEABLE		N/A	N/A	N/A	N/A
								-	12	13	-	-	-	-	18	19	20						
MX150 ASSY RCP 2X10 LG B/13	334722247	B-LIGHT GRAY	GCP	PLR		M	R	-	2	3	-	-	-	-	8	9	-	SALEABLE		N/A	N/A	N/A	N/A
								-	12	13	-	-	-	-	-	19	-						
MX150 ASSY RCP 2X10 LG B/12	334722248	B-LIGHT GRAY	GCP	PLR		M	R	-	2	3	-	-	-	-	8	9	-	SALEABLE		N/A	N/A	N/A	N/A
								-	12	13	-	-	-	-	18	19	-						
MX150 ASSY RCP 2X10 LG B/7	334722249	B-LIGHT GRAY	GCP	PLR		M	R	1	2	3	4	5	6	7	8	-	-	SALEABLE		N/A	N/A	N/A	N/A
								11	12	13	-	-	-	17	-	19	-						
MX150 ASSY RCP 2X10 LG B/15	334722250	B-LIGHT GRAY	GCP	PLR		M	R	-	-	-	-	-	-	-	-	-	-	SALEABLE		N/A	N/A	N/A	N/A
								11	12	13	-	-	-	17	-	19	-						
MX150 ASSY RCP 2X10 CPA BK A/19	334722251	A-BLACK	GCP	PLR	CPA	M	R	-	-	-	-	5	-	-	-	-	-	SALEABLE		N/A	N/A	N/A	N/A
								-	-	-	-	-	-	-	-	-	-						
MX150 ASSY RCP 2X10 BK A/14	334722252	A-BLACK	GCP	PLR		M	R	-	2	3	-	-	6	-	-	-	10	SALEABLE		N/A	N/A	N/A	N/A
								-	12	-	14	-	-	-	-	-	-						
MX150 ASSY RCP 2X10 BK A/9	334722253	A-BLACK	GCP	PLR		M	R	1	2	3	-	-	6	7	-	-	10	SALEABLE		N/A	N/A	N/A	N/A
								11	12	-	14	-	16	-	-	19	-						
MX150 ASSY RCP 2X10 BK A/13	334722254	A-BLACK	GCP	PLR		M	R	-	-	3	4	5	6	7	-	-	-	SALEABLE		N/A	N/A	N/A	N/A
								-	-	-	-	-	-	-	18	19	-						
MX150 ASSY RCP 2X10 BK A/11	334722255	A-BLACK	GCP	PLR		M	R	-	-	3	4	5	6	7	-	-	10	SALEABLE		N/A	N/A	N/A	N/A
								-	-	-	-	-	-	-	18	19	20						
MX150 ASSY RCP 2X10 BK A/15	334722256	A-BLACK	GCP	PLR		M	R	-	-	3	4	5	6	7	-	-	-	SALEABLE		N/A	N/A	N/A	N/A
								-	-	-	-	-	-	-	-	-	-						
MX150 ASSY RCP 2X10 BK A/9	334722257	A-BLACK	GCP	PLR		M	R	-	-	3	4	-	-	-	-	-	10	SALEABLE		N/A	N/A	N/A	N/A
								11	12	-	-	15	16	17	18	19	20						
MX150 ASSY RCP 2X10 BK A/11	334722258	A-BLACK	GCP	PLR		M	R	-	-	-	-	-	-	-	-	-	10	SALEABLE		N/A	N/A	N/A	N/A
								11	12	-	-	15	16	17	18	19	20						
MX150 ASSY RCP 2X10 BK A/13	334722259	A-BLACK	GCP	PLR		M	R	-	-	3	4	-	-	-	-	-	10	SALEABLE		N/A	N/A	N/A	N/A
								11	12	-	-	-	16	-	-	-	20						

molex

MX150 RECEPTACLE 2X10 SEALED ASSEMBLY MAT SEAL
BOM AND PIN OUT SHEET

ASSEMBLY DESCRIPTION	ASSEMBLY PART NUMBER	COMPONENT: THE PRESENCE OF AN ABBREVIATION INDICATES THE PRESENCE OF THAT COMPONENT						BLOCKED TERMINALS: CAVITY WITH A NUMBER INDICATES BLOCKED TERMINAL POSITION; CAVITY WITHOUT A NUMBER INDICATES OPEN TERMINAL POSITION										STATUS	COMMENT	OPTIONAL ATTACHMENTS SOLD SEPARATELY			
		HOUSING KEY/COLOR	GROMMET CAP	PLR	CPA	MAT SEAL	RING SEAL													BACKSHELL WITH RIBS	BACKSHELL WITHOUT RIBS	90^0 ADAPTOR WITH RIBS	90^0 ADAPTOR WITHOUT RIBS
MX150 ASSY RCP 2X10 BK A/15	334722260	A-BLACK	GCP	PLR		M	R	-	-	-	-	-	-	-	-	-	-	SALEABLE		N/A	N/A	N/A	N/A
								11	12	13	14	-	-	-	-	-	20						
MX150 ASSY RCP 2X10 BK A/15	334722261	A-BLACK	GCP	PLR		M	R	-	-	-	4	-	-	7	-	-	-	SALEABLE		N/A	N/A	N/A	N/A
								-	-	-	14	-	-	17	-	19	-						
MX150 ASSY RCP 2X10 BK A/12	334722262	A-BLACK	GCP	PLR		M	R	-	-	3	4	-	-	7	-	-	-	SALEABLE		N/A	N/A	N/A	N/A
								-	12	-	14	-	-	17	-	19	20						
MX150 ASSY RCP 2X10 BK A/14	334722263	A-BLACK	GCP	PLR		M	R	1	-	-	4	5	-	-	8	-	-	SALEABLE		N/A	N/A	N/A	N/A
								-	-	-	-	-	16	-	-	-	20						
MX150 ASSY RCP 2X10 BK A/14	334722264	A-BLACK	GCP	PLR		M	R	1	-	-	-	-	-	-	-	-	10	SALEABLE		N/A	N/A	N/A	N/A
								11	12	-	-	-	16	-	-	-	20						
MX150 ASSY RCP 2X10 BK A/15	334722265	A-BLACK	GCP	PLR		M	R	-	-	-	-	-	-	-	-	-	10	SALEABLE		N/A	N/A	N/A	N/A
								11	12	-	-	-	16	-	-	-	20						
MX150 ASSY RCP 2X10 CPA BK A/0	334722266	A-BLACK	GCP	PLR	CPA	M	R	1	2	3	4	5	6	7	8	9	10	SALEABLE		N/A	N/A	N/A	N/A
								11	12	13	14	15	16	17	18	19	20						
MX150 ASSY RCP 2X10 BK A/16	334722267	A-BLACK	GCP	PLR		M	R	1	-	-	4	5	-	-	8	-	-	SALEABLE		N/A	N/A	N/A	N/A
								-	-	-	-	-	-	-	-	-	-						
MX150 ASSY RCP 2X10 BK A/16	334722268	A-BLACK	GCP	PLR		M	R	1	-	-	-	-	-	-	-	-	10	SALEABLE		N/A	N/A	N/A	N/A
								11	12	-	-	-	-	-	-	-	-						
MX150 ASSY RCP 2X10 BK A/17	334722269	A-BLACK	GCP	PLR		M	R	-	-	-	4	5	-	-	8	-	-	SALEABLE		N/A	N/A	N/A	N/A
								-	-	-	-	-	-	-	-	-	-						
MX150 ASSY RCP 2X10 BK A/17	334722270	A-BLACK	GCP	PLR		M	R	-	-	-	-	-	-	-	-	-	10	SALEABLE		N/A	N/A	N/A	N/A
								11	12	-	-	-	-	-	-	-	-						
MX150 ASSY RCP 2X10 BK A/9	334722271	A-BLACK	GCP	PLR		M	R	-	2	-	-	-	-	7	8	9	10	SALEABLE		N/A	N/A	N/A	N/A
								-	12	13	-	-	16	17	18	-	20						
MX150 ASSY RCP 2X10 BK A/10	334722272	A-BLACK	GCP	PLR		M	R	1	2	-	-	-	-	-	8	9	10	SALEABLE		N/A	N/A	N/A	N/A
								-	12	13	-	-	16	17	18	-	-						
MX150 ASSY RCP 2X10 BK A/6	334722273	A-BLACK	GCP	PLR		M	R	1	2	3	-	-	-	-	8	9	10	SALEABLE		N/A	N/A	N/A	N/A
								-	12	13	14	15	16	17	18	19	-						
MX150 ASSY RCP 2X10 BK A/4	334722274	A-BLACK	GCP	PLR		M	R	1	2	3	-	-	-	7	8	9	10	SALEABLE		N/A	N/A	N/A	N/A
								-	12	13	14	15	16	17	18	19	20						
MX150 ASSY RCP 2X10 BK A/11	334722275	A-BLACK	GCP	PLR		M	R	-	2	-	-	-	-	7	8	9	10	SALEABLE		N/A	N/A	N/A	N/A
								-	12	13	-	-	-	17	18	-	-						
MX150 ASSY RCP 2X10 BK A/13	334722276	A-BLACK	GCP	PLR		M	R	1	-	-	-	-	-	7	-	-	10	SALEABLE		N/A	N/A	N/A	N/A
								-	12	13	-	-	-	17	18	-	-						
MX150 ASSY RCP 2X10 BK A/13	334722277	A-BLACK	GCP	PLR		M	R	-	-	-	4	5	-	7	8	-	-	SALEABLE		N/A	N/A	N/A	N/A
								-	-	-	-	-	16	-	-	19	20						
MX150 ASSY RCP 2X10 BK A/15	334722278	A-BLACK	GCP	PLR		M	R	-	-	-	-	-	-	7	-	-	10	SALEABLE		N/A	N/A	N/A	N/A
								-	-	-	-	-	16	-	-	19	20						
MX150 ASSY RCP 2X10 BK A/2	334722279	A-BLACK	GCP	PLR		M	R	-	2	3	4	5	-	7	8	9	10	SALEABLE		N/A	N/A	N/A	N/A
								11	12	13	14	15	16	17	18	19	20						
MX150 ASSY RCP 2X10 BK A/8	334722280	A-BLACK	GCP	PLR		M	R	-	2	3	4	5	-	7	8	-	-	SALEABLE		N/A	N/A	N/A	N/A
								-	-	13	14	-	-	17	18	19	20						
MX150 ASSY RCP 2X10 BK A/13	334722281	A-BLACK	GCP	PLR		M	R	-	2	3	-	5	-	-	-	-	-	SALEABLE		N/A	N/A	N/A	N/A
								-	-	13	-	-	-	17	-	19	20						
MX150 ASSY RCP 2X10 CPA BK A/2	334722282	A-BLACK	GCP	PLR	CPA	M	R	-	2	3	4	5	-	7	8	9	10	SALEABLE		N/A	N/A	N/A	N/A
								11	12	13	14	15	16	17	18	19	20						
MX150 ASSY RCP 2X10 CPA BK A/8	334722283	A-BLACK	GCP	PLR	CPA	M	R	-	2	3	4	5	-	7	8	-	-	SALEABLE		N/A	N/A	N/A	N/A
								-	-	13	14	-	-	17	18	19	20						
MX150 ASSY RCP 2X10 CPA BK A/13	334722284	A-BLACK	GCP	PLR	CPA	M	R	-	2	3	-	5	-	-	-	-	-	SALEABLE		N/A	N/A	N/A	N/A
								-	-	13	-	-	-	17	-	19	20						
MX150 ASSY RCP 2X10 BK A/16	334722285	A-BLACK	GCP	PLR		M	R	1	-	-	-	-	-	7	-	9	-	SALEABLE		N/A	N/A	N/A	N/A
								-	-	-	-	15	-	-	-	-	-						
MX150 ASSY RCP 2X10 BK A/7	334722286	A-BLACK	GCP	PLR		M	R	1	2	3	4	5	6	7	8	-	-	SALEABLE		N/A	N/A	N/A	N/A
								-	-	-	-	-	16	17	18	19	20						

MX150 RECEPTACLE 2X10 SEALED ASSEMBLY MAT SEAL
BOM AND PIN OUT SHEET

ASSEMBLY DESCRIPTION	ASSEMBLY PART NUMBER	COMPONENT: THE PRESENCE OF AN ABBREVIATION INDICATES THE PRESENCE OF THAT COMPONENT						BLOCKED TERMINALS: CAVITY WITH A NUMBER INDICATES BLOCKED TERMINAL POSITION; CAVITY WITHOUT A NUMBER INDICATES OPEN TERMINAL POSITION										STATUS	COMMENT	OPTIONAL ATTACHMENTS SOLD SEPARATELY			
		HOUSING KEY/COLOR	GROMMET CAP	PLR	CPA	MAT SEAL	RING SEAL													BACKSHELL WITH RIBS	BACKSHELL WITHOUT RIBS	90^0 ADAPTOR WITH RIBS	90^0 ADAPTOR WITHOUT RIBS
MX150 ASSY RCP 2X10 BK A/15	334722287	A-BLACK	GCP	PLR		M	R	-	-	-	-	-	-	-	-	-	-	SALEABLE		N/A	N/A	N/A	N/A
								-	-	-	-	-	16	17	18	19	20						
MX150 ASSY RCP 2X10 BK A/9	334722288	A-BLACK	GCP	PLR		M	R	1	2	3	4	5	6	7	8	-	-	SALEABLE		N/A	N/A	N/A	N/A
								-	-	-	-	-	-	-	18	19	20						
MX150 ASSY RCP 2X10 BK A/19	334722289	A-BLACK	GCP	PLR		M	R	-	-	-	-	-	-	-	-	-	-	SALEABLE		N/A	N/A	N/A	N/A
								-	-	-	-	-	-	-	18	-	-						
MX150 ASSY RCP 2X10 CPA BK A/12	334722290	A-BLACK	GCP	PLR	CPA	M	R	-	-	-	-	-	-	-	-	-	-	SALEABLE		N/A	N/A	N/A	N/A
								11	12	13	14	15	16	17	18	-	-						
MX150 ASSY RCP 2X10 CPA LG B/15	334722291	B-LIGHT GRAY	GCP	PLR	CPA	M	R	-	-	3	-	-	6	7	-	-	-	SALEABLE		N/A	N/A	N/A	N/A
								-	12	-	-	-	-	17	-	-	-						
MX150 ASSY RCP 2X10 BK A/6	334722292	A-BLACK	GCP	PLR		M	R	-	2	-	-	-	-	-	8	9	10	SALEABLE		N/A	N/A	N/A	N/A
								11	12	13	14	15	16	17	18	19	20						
MX150 ASSY RCP 2X10 BK A/14	334722293	A-BLACK	GCP	PLR		M	R	-	-	-	-	-	-	-	-	9	10	SALEABLE		N/A	N/A	N/A	N/A
								11	12	13	-	-	-	-	-	-	20						
MX150 ASSY RCP 2X10 BK A/12	334722294	A-BLACK	GCP	PLR		M	R	-	2	-	-	-	-	-	8	9	10	SALEABLE		N/A	N/A	N/A	N/A
								11	12	13	-	-	-	-	-	-	20						
MX150 ASSY RCP 2X10 BK A/6	334722295	A-BLACK	GCP	PLR		M	R	1	2	3	4	5	6	7	8	9	10	SALEABLE		N/A	N/A	N/A	N/A
								11	12	13	-	-	-	-	-	-	20						
MX150 ASSY RCP 2X10 BK A/17	334722296	A-BLACK	GCP	PLR		M	R	-	-	-	-	-	-	-	-	9	-	SALEABLE		N/A	N/A	N/A	N/A
								-	-	13	-	-	-	-	-	-	20						
MX150 ASSY RCP 2X10 BK A/15	334722297	A-BLACK	GCP	PLR		M	R	-	2	-	-	-	-	-	8	9	-	SALEABLE		N/A	N/A	N/A	N/A
								-	-	13	-	-	-	-	-	-	20						
MX150 ASSY RCP 2X10 BK A/11	334722298	A-BLACK	GCP	PLR		M	R	-	-	-	-	-	-	-	-	9	-	SALEABLE		N/A	N/A	N/A	N/A
								-	-	13	14	15	16	17	18	19	20						
MX150 ASSY RCP 2X10 BK A/9	334722299	A-BLACK	GCP	PLR		M	R	-	2	-	-	-	-	-	8	9	-	SALEABLE		N/A	N/A	N/A	N/A
								-	-	13	14	15	16	17	18	19	20						
MX150 ASSY RCP 2X10 BK A/9	334722300	A-BLACK	GCP	PLR		M	R	1	2	3	4	5	6	7	8	9	-	SALEABLE		N/A	N/A	N/A	N/A
								-	-	13	-	-	-	-	-	-	20						
MX150 ASSY RCP 2X10 BK A/3	334722301	A-BLACK	GCP	PLR		M	R	1	2	3	4	5	6	7	8	9	-	SALEABLE		N/A	N/A	N/A	N/A
								-	-	13	14	15	16	17	18	19	20						
MX150 ASSY RCP 2X10 BK A/6	334722302	A-BLACK	GCP	PLR		M	R	1	2	3	4	-	-	7	8	9	-	SALEABLE		N/A	N/A	N/A	N/A
								-	12	13	14	-	-	17	18	19	20						
MX150 ASSY RCP 2X10 BK A/8	334722303	A-BLACK	GCP	PLR		M	R	1	2	3	-	-	-	7	8	9	-	SALEABLE		N/A	N/A	N/A	N/A
								-	12	13	-	-	-	17	18	19	20						
MX150 ASSY RCP 2X10 BK A/3	334722304	A-BLACK	GCP	PLR		M	R	-	2	3	4	5	6	7	8	9	10	SALEABLE		N/A	N/A	N/A	N/A
								11	12	-	14	15	16	17	18	19	-						
MX150 ASSY RCP 2X10 BK A/9	334722305	A-BLACK	GCP	PLR		M	R	-	2	3	4	-	-	7	8	9	-	SALEABLE		N/A	N/A	N/A	N/A
								-	12	-	14	-	-	17	18	19	-						
MX150 ASSY RCP 2X10 BK A/11	334722306	A-BLACK	GCP	PLR		M	R	-	2	3	-	-	-	7	8	9	-	SALEABLE		N/A	N/A	N/A	N/A
								-	12	-	-	-	-	17	18	19	-						
MX150 ASSY RCP 2X10 BK A/14	334722307	A-BLACK	GCP	PLR		M	R	1	-	3	-	-	-	-	-	9	-	SALEABLE		N/A	N/A	N/A	N/A
								-	12	13	-	-	-	-	-	-	20						
MX150 ASSY RCP 2X10 BK A/15	334722308	A-BLACK	GCP	PLR		M	R	-	-	3	4	-	-	-	-	9	-	SALEABLE		N/A	N/A	N/A	N/A
								-	12	-	14	-	-	-	-	-	-						
MX150 ASSY RCP 2X10 BK A/17	334722309	A-BLACK	GCP	PLR		M	R	-	-	3	-	-	-	-	-	9	-	SALEABLE		N/A	N/A	N/A	N/A
								-	12	-	-	-	-	-	-	-	-						
MX150 ASSY RCP 2X10 BK A/12	334722310	A-BLACK	GCP	PLR		M	R	1	-	3	4	-	-	-	-	9	-	SALEABLE		N/A	N/A	N/A	N/A
								-	12	13	14	-	-	-	-	-	20						
MX150 ASSY RCP 2X10 BK A/9	334722311	A-BLACK	GCP	PLR		M	R	1	2	3	4	5	6	7	8	9	10	SALEABLE		N/A	N/A	N/A	N/A
								-	-	-	-	-	-	17	-	-	-						
MX150 ASSY RCP 2X10 BK A/7	334722312	A-BLACK	GCP	PLR		M	R	1	2	3	4	5	6	7	8	9	10	SALEABLE		N/A	N/A	N/A	N/A
								-	-	-	14	15	-	17	-	-	-						
MX150 ASSY RCP 2X10 CPA BK A/19	334722313	A-BLACK	GCP	PLR	CPA	M	R	-	-	-	-	-	-	-	-	-	-	SALEABLE		N/A	N/A	N/A	N/A
								-	-	-	-	-	-	-	18	-	-						

molex

MX150 RECEPTACLE 2X10 SEALED ASSEMBLY MAT SEAL
BOM AND PIN OUT SHEET

ASSEMBLY DESCRIPTION	ASSEMBLY PART NUMBER	COMPONENT						BLOCKED TERMINALS										STATUS	COMMENT	OPTIONAL ATTACHMENTS SOLD SEPARATELY			
		THE PRESENCE OF AN ABBREVIATION INDICATES THE PRESENCE OF THAT COMPONENT						CAVITY WITH A NUMBER INDICATES BLOCKED TERMINAL POSITION CAVITY WITHOUT A NUMBER INDICATES OPEN TERMINAL POSITION															
		HOUSING KEY/COLOR	GROMMET CAP	PLR	CPA	MAT SEAL	RING SEAL													BACKSHELL WITH RIBS	BACKSHELL WITHOUT RIBS	90^0 ADAPTOR WITH RIBS	90^0 ADAPTOR WITHOUT RIBS
MX150 ASSY RCP 2X10 CPA BK A/9	334722314	A-BLACK	GCP	PLR	CPA	M	R	-	2	-	4	5	6	-	8	9	10	SALEABLE		N/A	N/A	N/A	N/A
								-	-	-	14	-	-	-	18	19	20						
MX150 ASSY RCP 2X10 CPA BK A/13	334722315	A-BLACK	GCP	PLR	CPA	M	R	-	2	-	-	5	6	-	-	9	10	SALEABLE		N/A	N/A	N/A	N/A
								-	-	-	-	-	-	-	-	19	20						
MX150 ASSY RCP 2X10 CPA BK A/13	334722316	A-BLACK	GCP	PLR	CPA	M	R	1	-	3	-	-	6	-	-	9	10	SALEABLE		N/A	N/A	N/A	N/A
								-	12	13	-	-	-	-	-	-	-						
MX150 ASSY RCP 2X10 LG B/12	334722317	B-LIGHT GRAY	GCP	PLR		M	R	-	2	3	-	-	-	-	8	9	-	SALEABLE		N/A	N/A	N/A	N/A
								11	12	13	-	-	-	-	-	19	-						
MX150 ASSY RCP 2X10 LG B/11	334722318	B-LIGHT GRAY	GCP	PLR		M	R	-	2	3	-	-	-	-	8	9	-	SALEABLE		N/A	N/A	N/A	N/A
								11	12	13	-	-	-	-	18	19	-						
MX150 ASSY RCP 2X10 BK A/3	334722319	A-BLACK	GCP	PLR		M	R	1	-	3	4	5	-	7	8	9	10	SALEABLE		N/A	N/A	N/A	N/A
								11	12	13	14	15	16	17	18	19	-						
MX150 ASSY RCP 2X10 LG B/17	334722320	B-LIGHT GRAY	GCP	PLR		M	R	-	-	-	4	-	-	-	-	-	-	SALEABLE		N/A	N/A	N/A	N/A
								-	-	13	-	-	16	-	-	-	-						
MX150 ASSY RCP 2X10 BK A/17	334722321	A-BLACK	GCP	PLR		M	R	-	-	-	-	5	6	-	-	-	-	SALEABLE		N/A	N/A	N/A	N/A
								-	-	-	-	-	-	-	-	19	-						
MX150 ASSY RCP 2X10 BK A/14	334722322	A-BLACK	GCP	PLR		M	R	-	-	3	4	-	-	7	-	-	10	SALEABLE		N/A	N/A	N/A	N/A
								-	-	-	-	-	16	17	-	-	-						
MX150 ASSY RCP 2X10 LG B/12	334722323	B-LIGHT GRAY	GCP	PLR		M	R	-	2	-	4	-	-	-	8	9	-	SALEABLE		N/A	N/A	N/A	N/A
								11	-	-	14	-	-	-	-	19	20						
MX150 ASSY RCP 2X10 LG B/13	334722324	B-LIGHT GRAY	GCP	PLR		M	R	-	2	-	4	-	-	-	8	9	-	SALEABLE		N/A	N/A	N/A	N/A
								-	-	-	14	-	-	-	-	19	20						
MX150 ASSY RCP 2X10 LG B/12	334722325	B-LIGHT GRAY	GCP	PLR		M	R	-	2	-	4	-	-	-	8	9	-	SALEABLE		N/A	N/A	N/A	N/A
								-	-	-	14	-	-	-	18	19	20						
MX150 ASSY RCP 2X10 LG B/11	334722326	B-LIGHT GRAY	GCP	PLR		M	R	-	2	-	4	-	-	-	8	9	-	SALEABLE		N/A	N/A	N/A	N/A
								11	-	-	14	-	-	-	18	19	20						
MX150 ASSY RCP 2X10 LG B/9	334722327	B-LIGHT GRAY	GCP	PLR		M	R	1	2	3	4	-	-	-	8	9	10	SALEABLE		N/A	N/A	N/A	N/A
								-	-	-	14	-	-	-	18	19	20						
MX150 ASSY RCP 2X10 LG B/13	334722328	B-LIGHT GRAY	GCP	PLR		M	R	-	2	-	4	-	-	-	-	9	-	SALEABLE		N/A	N/A	N/A	N/A
								-	-	-	14	-	-	-	18	19	20						
MX150 ASSY RCP 2X10 LG B/14	334722329	B-LIGHT GRAY	GCP	PLR		M	R	-	2	-	4	-	-	-	-	9	-	SALEABLE		N/A	N/A	N/A	N/A
								-	-	-	14	-	-	-	-	19	20						
MX150 ASSY RCP 2X10 LG B/12	334722330	B-LIGHT GRAY	GCP	PLR		M	R	-	2	3	4	-	-	-	-	9	10	SALEABLE		N/A	N/A	N/A	N/A
								-	-	-	-	-	-	-	18	19	20						
MX150 ASSY RCP 2X10 LG B/13	334722331	B-LIGHT GRAY	GCP	PLR		M	R	-	2	3	4	-	-	-	-	9	10	SALEABLE		N/A	N/A	N/A	N/A
								-	-	-	-	-	-	-	-	19	20						
MX150 ASSY RCP 2X10 CPA BK A/17	334722332	A-BLACK	GCP	PLR	CPA	M	R	-	-	-	-	-	6	-	-	9	10	SALEABLE		N/A	N/A	N/A	N/A
								-	-	-	-	-	-	-	-	-	-						
MX150 ASSY RCP 2X10 BK A/14	334722333	A-BLACK	GCP	PLR		M	R	-	2	3	-	5	6	-	-	-	-	SALEABLE		N/A	N/A	N/A	N/A
								-	12	13	-	-	-	-	-	-	-						
MX150 ASSY RCP 2X10 BK A/8	334722334	A-BLACK	GCP	PLR		M	R	-	-	-	4	5	6	7	8	9	10	SALEABLE		N/A	N/A	N/A	N/A
								11	12	13	14	15	-	-	-	-	-						
MX150 ASSY RCP 2X10 BK A/11	334722335	A-BLACK	GCP	PLR		M	R	-	-	-	-	5	6	7	8	-	-	SALEABLE		N/A	N/A	N/A	N/A
								11	12	13	14	15	-	-	-	-	-						
MX150 ASSY RCP 2X10 BK A/14	334722336	A-BLACK	GCP	PLR		M	R	-	-	-	-	5	6	7	8	-	-	SALEABLE		N/A	N/A	N/A	N/A
								11	12	-	-	-	-	-	-	-	-						
MX150 ASSY RCP 2X10 BK A/13	334722337	A-BLACK	GCP	PLR		M	R	-	-	-	-	5	6	7	8	-	-	SALEABLE		N/A	N/A	N/A	N/A
								11	12	-	-	15	-	-	-	-	-						
MX150 ASSY RCP 2X10 BK A/15	334722338	A-BLACK	GCP	PLR		M	R	1	-	3	4	5	-	-	-	-	-	SALEABLE		N/A	N/A	N/A	N/A
								-	-	-	-	-	-	-	-	19	-						
MX150 ASSY RCP 2X10 BK A/17	334722339	A-BLACK	GCP	PLR		M	R	-	2	-	-	-	6	-	-	-	-	SALEABLE		N/A	N/A	N/A	N/A
								-	-	-	-	-	-	-	-	-	20						
MX150 ASSY RCP 2X10 BK A/6	334722340	A-BLACK	GCP	PLR		M	R	1	2	3	4	5	6	7	8	-	10	SALEABLE		N/A	N/A	N/A	N/A
								11	-	-	14	-	-	17	18	19	-						

molex

MX150 RECEPTACLE 2X10 SEALED ASSEMBLY MAT SEAL
BOM AND PIN OUT SHEET

ASSEMBLY DESCRIPTION	ASSEMBLY PART NUMBER	COMPONENT						BLOCKED TERMINALS										STATUS	COMMENT	OPTIONAL ATTACHMENTS SOLD SEPARATELY			
		THE PRESENCE OF AN ABBREVIATION INDICATES THE PRESENCE OF THAT COMPONENT						CAVITY WITH A NUMBER INDICATES BLOCKED TERMINAL POSITION CAVITY WITHOUT A NUMBER INDICATES OPEN TERMINAL POSITION															
		HOUSING KEY/COLOR	GROMMET CAP	PLR	CPA	MAT SEAL	RING SEAL													BACKSHELL WITH RIBS	BACKSHELL WITHOUT RIBS	90^0 ADAPTOR WITH RIBS	90^0 ADAPTOR WITHOUT RIBS
MX150 ASSY RCP 2X10 LG B/12	334722341	B-LIGHT GRAY	GCP	PLR		M	R	-	-	-	4	-	-	7	8	9	10	SALEABLE		N/A	N/A	N/A	N/A
								11	12	13	-	-	-	-	-	-	-						
MX150 ASSY RCP 2X10 LG B/19	334722342	B-LIGHT GRAY	GCP	PLR		M	R	-	-	-	-	-	-	-	-	-	-	SALEABLE		N/A	N/A	N/A	N/A
								-	-	-	-	-	16	-	-	-	-						
MX150 ASSY RCP 2X10 BK A/13	334722343	A-BLACK	GCP	PLR		M	R	1	-	-	-	5	6	-	-	-	10	SALEABLE		N/A	N/A	N/A	N/A
								11	-	-	-	-	-	-	-	19	20						
MX150 ASSY RCP 2X10 CPA BK A/16	334722344	A-BLACK	GCP	PLR	CPA	M	R	-	2	-	-	-	6	-	-	-	10	SALEABLE		N/A	N/A	N/A	N/A
								-	-	-	-	15	-	-	-	-	-						
MX150 ASSY RCP 2X10 BK A/10	334722345	A-BLACK	GCP	PLR		M	R	-	-	-	-	5	6	7	8	9	-	SALEABLE		N/A	N/A	N/A	N/A
								11	12	13	-	-	-	17	18	-	-						
MX150 ASSY RCP 2X10 BK A/7	334722346	A-BLACK	GCP	PLR		M	R	-	2	3	4	5	6	7	8	9	-	SALEABLE		N/A	N/A	N/A	N/A
								11	-	13	14	-	-	-	-	19	20						
MX150 ASSY RCP 2X10 BK A/8	334722347	A-BLACK	GCP	PLR		M	R	-	2	3	4	5	6	7	8	9	-	SALEABLE		N/A	N/A	N/A	N/A
								11	-	-	14	-	-	-	-	19	20						
MX150 ASSY RCP 2X10 BK A/15	334722348	A-BLACK	GCP	PLR		M	R	-	-	-	-	5	6	7	8	9	-	SALEABLE		N/A	N/A	N/A	N/A
								-	-	-	-	-	-	-	-	-	-						
MX150 ASSY RCP 2X10 BK A/4	334722349	A-BLACK	GCP	PLR		M	R	1	2	3	4	-	6	7	8	9	10	SALEABLE		N/A	N/A	N/A	N/A
								-	12	13	14	15	16	17	-	-	20						
MX150 ASSY RCP 2X10 BK A/15	334722350	A-BLACK	GCP	PLR		M	R	-	-	3	4	5	-	-	-	-	-	SALEABLE		N/A	N/A	N/A	N/A
								-	-	-	-	-	-	-	18	19	-						
MX150 ASSY RCP 2X10 BK A/6	334722351	A-BLACK	GCP	PLR		M	R	-	-	3	4	-	6	7	8	9	10	SALEABLE		N/A	N/A	N/A	N/A
								-	12	13	14	15	16	17	-	-	20						
MX150 ASSY RCP 2X10 BK A/9	334722352	A-BLACK	GCP	PLR		M	R	-	-	3	4	-	6	-	8	9	-	SALEABLE		N/A	N/A	N/A	N/A
								-	12	13	14	15	16	17	-	-	-						
MX150 ASSY RCP 2X10 BK A/14	334722353	A-BLACK	GCP	PLR		M	R	-	-	3	4	5	6	-	-	-	-	SALEABLE		N/A	N/A	N/A	N/A
								-	-	-	-	-	-	-	18	19	-						
MX150 ASSY RCP 2X10 BK A/12	334722354	A-BLACK	GCP	PLR		M	R	-	-	3	4	5	-	7	-	-	10	SALEABLE		N/A	N/A	N/A	N/A
								-	-	-	-	-	-	-	18	19	20						
MX150 ASSY RCP 2X10 LG B/18	334722355	B-LIGHT GRAY	GCP	PLR		M	R	-	-	-	-	-	-	-	-	-	-	SALEABLE		N/A	N/A	N/A	N/A
								-	-	-	-	-	-	-	-	19	20						
MX150 ASSY RCP 2X10 LG B/16	334722356	B-LIGHT GRAY	GCP	PLR		M	R	-	-	-	-	-	-	-	-	-	-	SALEABLE		N/A	N/A	N/A	N/A
								-	-	-	-	-	-	17	18	19	20						
MX150 ASSY RCP 2X10 LG B/17	334722357	B-LIGHT GRAY	GCP	PLR		M	R	-	-	-	-	-	-	-	-	-	-	SALEABLE		N/A	N/A	N/A	N/A
								-	-	-	-	-	-	-	18	19	20						
MX150 ASSY RCP 2X10 LG B/17	334722358	B-LIGHT GRAY	GCP	PLR		M	R	-	-	-	-	-	-	-	-	-	-	SALEABLE		N/A	N/A	N/A	N/A
								11	-	13	-	-	-	-	-	-	20						
MX150 ASSY RCP 2X10 BK A/18	334722359	A-BLACK	GCP	PLR		M	R	-	-	-	-	-	-	-	-	-	-	SALEABLE		N/A	N/A	N/A	N/A
								-	-	-	-	-	-	-	-	19	20						
MX150 ASSY RCP 2X10 LG B/19	334722360	B-LIGHT GRAY	GCP	PLR		M	R	-	-	-	-	-	-	-	-	-	-	SALEABLE		N/A	N/A	N/A	N/A
								-	-	-	-	-	-	-	-	-	20						
MX150 ASSY RCP 2X10 LG B/17	334722361	B-LIGHT GRAY	GCP	PLR		M	R	-	-	-	-	-	-	-	-	-	-	SALEABLE		N/A	N/A	N/A	N/A
								-	-	-	-	-	-	17	18	-	20						
MX150 ASSY RCP 2X10 LG B/17	334722362	B-LIGHT GRAY	GCP	PLR		M	R	-	-	-	-	-	-	-	-	-	-	SALEABLE		N/A	N/A	N/A	N/A
								-	-	-	-	15	-	-	-	19	20						
MX150 ASSY RCP 2X10 LG B/11	334722363	B-LIGHT GRAY	GCP	PLR		M	R	-	-	-	-	-	-	-	-	-	10	SALEABLE		N/A	N/A	N/A	N/A
								11	12	13	-	-	16	17	18	19	20						
MX150 ASSY RCP 2X10 LG B/15	334722364	B-LIGHT GRAY	GCP	PLR		M	R	-	-	-	-	-	-	-	-	-	-	SALEABLE		N/A	N/A	N/A	N/A
								-	-	-	-	-	16	17	18	19	20						
MX150 ASSY RCP 2X10 LG B/9	334722365	B-LIGHT GRAY	GCP	PLR		M	R	-	2	-	-	-	-	-	-	-	-	SALEABLE		N/A	N/A	N/A	N/A
								11	12	13	14	15	16	17	18	19	20						
MX150 ASSY RCP 2X10 CPA LG B/17	334722366	B-LIGHT GRAY	GCP	PLR	CPA	M	R	-	-	-	4	-	-	-	-	-	-	SALEABLE		N/A	N/A	N/A	N/A
								-	-	13	-	-	16	-	-	-	-						
MX150 ASSY RCP 2X10 CPA LG B/12	334722367	B-LIGHT GRAY	GCP	PLR	CPA	M	R	-	-	-	4	-	-	7	8	9	10	SALEABLE		N/A	N/A	N/A	N/A
								11	12	13	-	-	-	-	-	-	-						

molex

MX150 RECEPTACLE 2X10 SEALED ASSEMBLY MAT SEAL

BOM AND PIN OUT SHEET

ASSEMBLY DESCRIPTION	ASSEMBLY PART NUMBER	COMPONENT						BLOCKED TERMINALS										STATUS	COMMENT	OPTIONAL ATTACHMENTS SOLD SEPARATELY			
		THE PRESENCE OF AN ABBREVIATION INDICATES THE PRESENCE OF THAT COMPONENT						CAVITY WITH A NUMBER INDICATES BLOCKED TERMINAL POSITION CAVITY WITHOUT A NUMBER INDICATES OPEN TERMINAL POSITION															
		HOUSING KEY/COLOR	GROMMET CAP	PLR	CPA	MAT SEAL	RING SEAL													BACKSHELL WITH RIBS	BACKSHELL WITHOUT RIBS	90° ADAPTOR WITH RIBS	90° ADAPTOR WITHOUT RIBS
MX150 ASSY RCP 2X10 CPA LG B/19	334722368	B-LIGHT GRAY	GCP	PLR	CPA	M	R	-	-	-	-	-	-	-	-	-	-	SALEABLE		N/A	N/A	N/A	N/A
								-	-	-	-	-	16	-	-	-	-						
MX150 ASSY RCP 2X10 LG B/15	334722369	B-LIGHT GRAY	GCP	PLR		M	R	-	-	3	-	-	-	-	-	-	-	SALEABLE		N/A	N/A	N/A	N/A
								11	-	-	14	-	-	17	-	19	-						
MX150 ASSY RCP 2X10 CS BK A/20	334722501	A-BLACK-CLIP	GCO	PLR		M	R	-	-	-	-	-	-	-	-	-	-	SALEABLE		34951-2011	34951-2021	34951-1631	34951-1641
								-	-	-	-	-	-	-	-	-	-						
MX150 ASSY RCP 2X10 CS LG B/20	334722502	B-LIGHT GRAY-CLIP	GCO	PLR		M	R	-	-	-	-	-	-	-	-	-	-	SALEABLE		34951-2011	34951-2021	34951-1631	34951-1641
								-	-	-	-	-	-	-	-	-	-						
MX150 ASSY RCP 2X10 CS DG C/20	334722503	C-DARK GRAY-CLIP	GCO	PLR		M	R	-	-	-	-	-	-	-	-	-	-	SALEABLE		34951-2011	34951-2021	34951-1631	34951-1641
								-	-	-	-	-	-	-	-	-	-						
MX150 ASSY RCP 2X10 CS SG D/20	334722504	D-STONE GRAY-CLIP	GCO	PLR		M	R	-	-	-	-	-	-	-	-	-	-	SALEABLE		34951-2011	34951-2021	34951-1631	34951-1641
								-	-	-	-	-	-	-	-	-	-						
MX150 ASSY RCP 2X10 CS YW A/20	334722505	A-YELLOW-CLIP	GCO	PLR		M	R	-	-	-	-	-	-	-	-	-	-	SALEABLE		34951-2011	34951-2021	34951-1631	34951-1641
								-	-	-	-	-	-	-	-	-	-						
MX150 ASSY RCP 2X10 CS CPA BK A/20	334722506	A-BLACK-CLIP	GCO	PLR	CPA	M	R	-	-	-	-	-	-	-	-	-	-	SALEABLE		34951-2011	34951-2021	34951-1631	34951-1641
								-	-	-	-	-	-	-	-	-	-						
MX150 ASSY RCP 2X10 CS CPA LG B/20	334722507	B-LIGHT GRAY-CLIP	GCO	PLR	CPA	M	R	-	-	-	-	-	-	-	-	-	-	SALEABLE		34951-2011	34951-2021	34951-1631	34951-1641
								-	-	-	-	-	-	-	-	-	-						
MX150 ASSY RCP 2X10 CS CPA DG C/20	334722508	C-DARK GRAY-CLIP	GCO	PLR	CPA	M	R	-	-	-	-	-	-	-	-	-	-	SALEABLE		34951-2011	34951-2021	34951-1631	34951-1641
								-	-	-	-	-	-	-	-	-	-						
MX150 ASSY RCP 2X10 CS CPA SG D/20	334722509	D-STONE GRAY-CLIP	GCO	PLR	CPA	M	R	-	-	-	-	-	-	-	-	-	-	SALEABLE		34951-2011	34951-2021	34951-1631	34951-1641
								-	-	-	-	-	-	-	-	-	-						
MX150 ASSY RCP 2X10 CS CPA YW A/20	334722510	A-YELLOW-CLIP	GCO	PLR	CPA	M	R	-	-	-	-	-	-	-	-	-	-	SALEABLE		34951-2011	34951-2021	34951-1631	34951-1641
								-	-	-	-	-	-	-	-	-	-						
MX150 ASSY RCP 2X10 CS BK A/13	334722511	A-BLACK-CLIP	GCP	PLR		M	R	-	-	-	-	5	6	7	8	-	-	SALEABLE		34951-2011	34951-2021	34951-1631	34951-1641
								11	12	-	-	15	-	-	-	-	-						
MX150 ASSY RCP 2X10 CS BK A/14	334722512	A-BLACK-CLIP	GCP	PLR		M	R	-	-	-	-	5	6	7	8	-	-	SALEABLE		34951-2011	34951-2021	34951-1631	34951-1641
								11	12	-	-	-	-	-	-	-	-						
MX150 ASSY RCP 2X10 CS BK A/8	334722513	A-BLACK-CLIP	GCP	PLR		M	R	-	-	-	4	5	6	7	8	9	10	SALEABLE		34951-2011	34951-2021	34951-1631	34951-1641
								11	12	13	14	15	-	-	-	-	-						
MX150 ASSY RCP 2X10 CS BK A/11	334722514	A-BLACK-CLIP	GCP	PLR		M	R	-	-	-	-	5	6	7	8	-	-	SALEABLE		34951-2011	34951-2021	34951-1631	34951-1641
								11	12	13	14	15	-	-	-	-	-						
MX150 ASSY RCP 2X10 CS BK A/7	334722515	A-BLACK-CLIP	GCP	PLR		M	R	-	-	-	4	5	6	7	-	9	10	SALEABLE		34951-2011	34951-2021	34951-1631	34951-1641
								11	12	13	14	15	-	-	18	19	-						
MX150 ASSY RCP 2X10 CS BK A/12	334722516	A-BLACK-CLIP	GCP	PLR		M	R	-	-	-	4	5	6	7	-	9	10	SALEABLE		34951-2011	34951-2021	34951-1631	34951-1641
								-	-	-	-	-	-	-	18	19	-						
MX150 ASSY RCP 2X10 CS BK A/10	334722517	A-BLACK-CLIP	GCP	PLR		M	R	-	-	-	-	5	6	7	-	-	-	SALEABLE		34951-2011	34951-2021	34951-1631	34951-1641
								11	12	13	14	15	-	-	18	19	-						
MX150 ASSY RCP 2X10 CS BK A/16	334722518	A-BLACK-CLIP	GCP	PLR		M	R	-	-	-	-	5	6	7	8	-	-	SALEABLE		34951-2011	34951-2021	34951-1631	34951-1641
								-	-	-	-	-	-	-	-	-	-						
MX150 ASSY RCP 2X10 CS BK A/10	334722519	A-BLACK-CLIP	GCP	PLR		M	R	-	-	-	4	5	6	7	-	9	10	SALEABLE		34951-2011	34951-2021	34951-1631	34951-1641
								11	12	-	-	-	-	-	18	19	-						
MX150 ASSY RCP 2X10 CS BK A/13	334722520	A-BLACK-CLIP	GCP	PLR		M	R	-	-	-	-	5	6	7	-	-	-	SALEABLE		34951-2011	34951-2021	34951-1631	34951-1641
								11	12	-	-	-	-	-	18	19	-						
MX150 ASSY RCP 2X10 CS BK A/6	334722521	A-BLACK-CLIP	GCP	PLR		M	R	-	-	-	4	5	6	7	8	9	10	SALEABLE		34951-2011	34951-2021	34951-1631	34951-1641
								11	12	13	14	15	-	-	18	19	-						
MX150 ASSY RCP 2X10 CS BK A/8	334722522	A-BLACK-CLIP	GCP	PLR		M	R	-	-	-	4	5	6	7	8	9	10	SALEABLE		34951-2011	34951-2021	34951-1631	34951-1641
								-	-	13	14	15	-	-	18	19	-						
MX150 ASSY RCP 2X10 CS BK A/9	334722523	A-BLACK-CLIP	GCP	PLR		M	R	-	-	-	-	5	6	7	8	-	-	SALEABLE		34951-2011	34951-2021	34951-1631	34951-1641
								11	12	13	14	15	-	-	18	19	-						
MX150 ASSY RCP 2X10 CS BK A/11	334722524	A-BLACK-CLIP	GCP	PLR		M	R	-	-	-	-	5	6	7	8	-	-	SALEABLE		34951-2011	34951-2021	34951-1631	34951-1641
								-	-	13	14	15	-	-	18	19	-						
MX150 ASSY RCP 2X10 CS BK A/9	334722525	A-BLACK-CLIP	GCP	PLR		M	R	-	-	-	4	5	6	7	8	9	10	SALEABLE		34951-2011	34951-2021	34951-1631	34951-1641
								11	12	-	-	-	-	-	18	19	-						

molex

MX150 RECEPTACLE 2X10 SEALED ASSEMBLY MAT SEAL
BOM AND PIN OUT SHEET

ASSEMBLY DESCRIPTION	ASSEMBLY PART NUMBER	COMPONENT						BLOCKED TERMINALS										STATUS	COMMENT	OPTIONAL ATTACHMENTS SOLD SEPARATELY			
		THE PRESENCE OF AN ABBREVIATION INDICATES THE PRESENCE OF THAT COMPONENT						CAVITY WITH A NUMBER INDICATES BLOCKED TERMINAL POSITION CAVITY WITHOUT A NUMBER INDICATES OPEN TERMINAL POSITION															
		HOUSING KEY/COLOR	GROMMET CAP	PLR	CPA	MAT SEAL	RING SEAL													BACKSHELL WITH RIBS	BACKSHELL WITHOUT RIBS	90^0 ADAPTOR WITH RIBS	90^0 ADAPTOR WITHOUT RIBS
MX150 ASSY RCP 2X10 CS BK A/11	334722526	A-BLACK-CLIP	GCP	PLR		M	R	-	-	-	4	5	6	7	8	9	10	SALEABLE		34951-2011	34951-2021	34951-1631	34951-1641
								-	-	-	-	-	-	-	18	19	-						
MX150 ASSY RCP 2X10 CS BK A/12	334722527	A-BLACK-CLIP	GCP	PLR		M	R	-	-	-	-	5	6	7	8	-	-	SALEABLE		34951-2011	34951-2021	34951-1631	34951-1641
								11	12	-	-	-	-	-	18	19	-						
MX150 ASSY RCP 2X10 CS BK A/14	334722528	A-BLACK-CLIP	GCP	PLR		M	R	-	-	-	-	5	6	7	8	-	-	SALEABLE		34951-2011	34951-2021	34951-1631	34951-1641
								-	-	-	-	-	-	-	18	19	-						
MX150 ASSY RCP 2X10 CS BK A/9	334722529	A-BLACK-CLIP	GCP	PLR		M	R	-	-	-	4	-	-	7	8	9	10	SALEABLE		34951-2011	34951-2021	34951-1631	34951-1641
								11	12	13	14	-	-	-	18	19	-						
MX150 ASSY RCP 2X10 CS BK A/11	334722530	A-BLACK-CLIP	GCP	PLR		M	R	-	-	-	4	-	-	7	8	9	10	SALEABLE		34951-2011	34951-2021	34951-1631	34951-1641
								-	-	13	14	-	-	-	18	19	-						
MX150 ASSY RCP 2X10 CS BK A/12	334722531	A-BLACK-CLIP	GCP	PLR		M	R	-	-	-	-	-	-	7	8	-	-	SALEABLE		34951-2011	34951-2021	34951-1631	34951-1641
								11	12	13	14	-	-	-	18	19	-						
MX150 ASSY RCP 2X10 CS BK A/14	334722532	A-BLACK-CLIP	GCP	PLR		M	R	-	-	-	-	-	-	7	8	-	-	SALEABLE		34951-2011	34951-2021	34951-1631	34951-1641
								-	-	13	14	-	-	-	18	19	-						
MX150 ASSY RCP 2X10 CS BK A/15	334722533	A-BLACK-CLIP	GCP	PLR		M	R	-	-	-	-	5	6	7	-	-	-	SALEABLE		34951-2011	34951-2021	34951-1631	34951-1641
								-	-	-	-	-	-	-	18	19	-						
MX150 ASSY RCP 2X10 CS BK A/10	334722534	A-BLACK-CLIP	GCP	PLR		M	R	-	-	-	4	5	6	7	8	9	10	SALEABLE		34951-2011	34951-2021	34951-1631	34951-1641
								11	12	-	-	15	-	-	-	-	-						
MX150 ASSY RCP 2X10 CS BK A/8	334722535	A-BLACK-CLIP	GCP	PLR		M	R	-	-	-	4	5	6	7	8	9	10	SALEABLE		34951-2011	34951-2021	34951-1631	34951-1641
								11	12	-	-	15	-	-	18	19	-						
MX150 ASSY RCP 2X10 CS BK A/10	334722536	A-BLACK-CLIP	GCP	PLR		M	R	-	-	-	4	5	6	7	8	9	10	SALEABLE		34951-2011	34951-2021	34951-1631	34951-1641
								-	-	-	-	15	-	-	18	19	-						
MX150 ASSY RCP 2X10 CS BK A/11	334722537	A-BLACK-CLIP	GCP	PLR		M	R	-	-	-	-	5	6	7	8	-	-	SALEABLE		34951-2011	34951-2021	34951-1631	34951-1641
								11	12	-	-	15	-	-	18	19	-						
MX150 ASSY RCP 2X10 CS BK A/13	334722538	A-BLACK-CLIP	GCP	PLR		M	R	-	-	-	-	5	6	7	8	-	-	SALEABLE		34951-2011	34951-2021	34951-1631	34951-1641
								-	-	-	-	15	-	-	18	19	-						
MX150 ASSY RCP 2X10 CS BK A/11	334722539	A-BLACK-CLIP	GCP	PLR		M	R	-	-	-	4	5	6	7	8	9	10	SALEABLE		34951-2011	34951-2021	34951-1631	34951-1641
								11	12	-	-	-	-	-	-	-	-						
MX150 ASSY RCP 2X10 BK A/15	334722540	A-BLACK	GCP	PLR		M	R	-	-	-	-	-	6	-	-	-	-	SALEABLE		N/A	N/A	N/A	N/A
								-	-	-	-	-	-	17	18	19	20						
MX150 ASSY RCP 2X10 BK A/12	334722541	A-BLACK	GCP	PLR		M	R	-	2	-	-	-	6	7	-	-	10	SALEABLE		N/A	N/A	N/A	N/A
								-	-	-	-	-	-	17	18	19	20						
MX150 ASSY RCP 2X10 BK A/10	334722542	A-BLACK	GCP	PLR		M	R	-	2	3	-	-	6	7	-	-	10	SALEABLE		N/A	N/A	N/A	N/A
								11	-	-	-	-	-	17	18	19	20						
MX150 ASSY RCP 2X10 BK A/10	334722543	A-BLACK	GCP	PLR		M	R	1	2	-	-	-	6	7	8	-	10	SALEABLE		N/A	N/A	N/A	N/A
								-	-	-	-	-	-	17	18	19	20						
MX150 ASSY RCP 2X10 BK A/8	334722544	A-BLACK	GCP	PLR		M	R	1	2	3	-	-	6	7	8	-	10	SALEABLE		N/A	N/A	N/A	N/A
								11	-	-	-	-	-	17	18	19	20						
MX150 ASSY RCP 2X10 BK A/14	334722545	A-BLACK	GCP	PLR		M	R	-	-	3	-	-	-	-	-	-	-	SALEABLE		N/A	N/A	N/A	N/A
								11	-	-	-	-	-	17	18	19	20						
MX150 ASSY RCP 2X10 BK A/12	334722546	A-BLACK	GCP	PLR		M	R	1	-	3	-	-	-	-	8	-	-	SALEABLE		N/A	N/A	N/A	N/A
								11	-	-	-	-	-	17	18	19	20						
MX150 ASSY RCP 2X10 BK A/9	334722547	A-BLACK	GCP	PLR		M	R	1	2	3	-	-	-	7	8	-	10	SALEABLE		N/A	N/A	N/A	N/A
								11	-	-	-	-	-	17	18	19	20						
MX150 ASSY RCP 2X10 BK A/16	334722548	A-BLACK	GCP	PLR		M	R	-	-	3	-	-	6	-	-	-	-	SALEABLE		N/A	N/A	N/A	N/A
								-	12	13	-	-	-	-	-	-	-						
MX150 ASSY RCP 2X10 BK A/12	334722549	A-BLACK	GCP	PLR		M	R	1	-	3	-	5	6	7	-	-	-	SALEABLE		N/A	N/A	N/A	N/A
								11	12	13	-	-	-	-	-	-	-						
MX150 ASSY RCP 2X10 BK A/14	334722550	A-BLACK	GCP	PLR		M	R	-	-	3	-	5	6	-	-	-	-	SALEABLE		N/A	N/A	N/A	N/A
								11	12	13	-	-	-	-	-	-	-						
MX150 ASSY RCP 2X10 BK A/12	334722551	A-BLACK	GCP	PLR		M	R	-	-	-	-	5	-	-	8	-	-	SALEABLE		N/A	N/A	N/A	N/A
								11	-	-	14	-	16	17	-	19	20						
MX150 ASSY RCP 2X10 BK A/14	334722552	A-BLACK	GCP	PLR		M	R	-	2	3	-	-	6	-	8	-	-	SALEABLE		N/A	N/A	N/A	N/A
								-	12	13	-	-	-	-	-	-	-						

molex

MX150 RECEPTACLE 2X10 SEALED ASSEMBLY MAT SEAL
BOM AND PIN OUT SHEET

ASSEMBLY DESCRIPTION	ASSEMBLY PART NUMBER	COMPONENT						BLOCKED TERMINALS										STATUS	COMMENT	OPTIONAL ATTACHMENTS SOLD SEPARATELY			
		THE PRESENCE OF AN ABBREVIATION INDICATES THE PRESENCE OF THAT COMPONENT						CAVITY WITH A NUMBER INDICATES BLOCKED TERMINAL POSITION CAVITY WITHOUT A NUMBER INDICATES OPEN TERMINAL POSITION															
		HOUSING KEY/COLOR	GROMMET CAP	PLR	CPA	MAT SEAL	RING SEAL													BACKSHELL WITH RIBS	BACKSHELL WITHOUT RIBS	90^0 ADAPTOR WITH RIBS	90^0 ADAPTOR WITHOUT RIBS
MX150 ASSY RCP 2X10 BK A/10	334722553	A-BLACK	GCP	PLR		M	R	1	2	3	-	5	6	7	8	-	-	SALEABLE		N/A	N/A	N/A	N/A
								11	12	13	-	-	-	-	-	-	-						
MX150 ASSY RCP 2X10 BK A/12	334722554	A-BLACK	GCP	PLR		M	R	-	2	3	-	5	6	-	8	-	-	SALEABLE		N/A	N/A	N/A	N/A
								11	12	13	-	-	-	-	-	-	-						
MX150 ASSY RCP 2X10 BK A/14	334722555	A-BLACK	GCP	PLR		M	R	1	-	-	-	-	-	-	-	9	10	SALEABLE		N/A	N/A	N/A	N/A
								11	12	-	-	-	-	-	-	-	20						
MX150 ASSY RCP 2X10 BK A/12	334722556	A-BLACK	GCP	PLR		M	R	1	-	3	4	-	-	-	-	9	10	SALEABLE		N/A	N/A	N/A	N/A
								11	12	-	-	-	-	-	-	-	20						
MX150 ASSY RCP 2X10 BK A/8	334722557	A-BLACK	GCP	PLR		M	R	1	-	3	4	5	6	7	8	9	10	SALEABLE		N/A	N/A	N/A	N/A
								11	12	-	-	-	-	-	-	-	20						
MX150 ASSY RCP 2X10 CPA BK A/12	334722558	A-BLACK	GCP	PLR	CPA	M	R	-	-	-	-	5	-	-	-	9	-	SALEABLE		N/A	N/A	N/A	N/A
								-	12	-	-	15	16	-	18	19	20						
MX150 ASSY RCP 2X10 CPA LG B/6	334722559	B-LIGHT GRAY	GCP	PLR	CPA	M	R	-	-	-	-	5	6	7	8	9	10	SALEABLE		N/A	N/A	N/A	N/A
								11	12	13	14	-	-	17	18	19	20						
MX150 ASSY RCP 2X10 CPA LG B/8	334722560	B-LIGHT GRAY	GCP	PLR	CPA	M	R	1	2	3	4	5	6	7	8	-	-	SALEABLE		N/A	N/A	N/A	N/A
								-	-	13	-	-	16	-	-	19	20						
MX150 ASSY RCP 2X10 BK A/10	334722561	A-BLACK	GCP	PLR		M	R	1	2	3	-	-	6	7	-	-	10	SALEABLE		N/A	N/A	N/A	N/A
								11	12	-	-	-	16	-	-	19	-						
MX150 ASSY RCP 2X10 BK A/15	334722562	A-BLACK	GCP	PLR		M	R	-	2	3	-	-	6	-	-	-	10	SALEABLE		N/A	N/A	N/A	N/A
								-	12	-	-	-	-	-	-	-	-						
MX150 ASSY RCP 2X10 BK A/3	334722563	A-BLACK	GCP	PLR		M	R	1	2	3	4	5	6	-	8	-	10	SALEABLE		N/A	N/A	N/A	N/A
								11	12	13	14	15	16	-	18	19	20						
MX150 ASSY RCP 2X10 BK A/16	334722564	A-BLACK	GCP	PLR		M	R	1	-	-	-	-	-	-	8	-	-	SALEABLE		N/A	N/A	N/A	N/A
								11	-	-	-	-	-	-	-	-	20						
MX150 ASSY RCP 2X10 BK A/13	334722565	A-BLACK	GCP	PLR		M	R	1	-	-	-	-	6	7	8	9	-	SALEABLE		N/A	N/A	N/A	N/A
								11	-	-	-	-	-	-	-	-	20						
MX150 ASSY RCP 2X10 LG B/17	334722566	B-LIGHT GRAY	GCP	PLR		M	R	-	-	-	-	5	6	-	-	-	-	SALEABLE		N/A	N/A	N/A	N/A
								-	-	-	-	-	-	-	-	19	-						
MX150 ASSY RCP 2X10 LG B/18	334722567	B-LIGHT GRAY	GCP	PLR		M	R	-	-	3	-	-	-	-	-	-	-	SALEABLE		N/A	N/A	N/A	N/A
								-	-	-	14	-	-	-	-	-	-						
MX150 ASSY RCP 2X10 BK A/17	334722568	A-BLACK	GCP	PLR		M	R	-	-	3	-	-	-	-	8	-	-	SALEABLE		N/A	N/A	N/A	N/A
								-	-	-	-	-	-	-	-	-	20						
MX150 ASSY RCP 2X10 BK A/15	334722569	A-BLACK	GCP	PLR		M	R	-	-	-	-	-	-	-	-	9	10	SALEABLE		N/A	N/A	N/A	N/A
								11	12	-	-	-	-	-	-	-	20						
MX150 ASSY RCP 2X10 BK A/16	334722570	A-BLACK	GCP	PLR		M	R	1	-	-	-	-	-	-	-	-	-	SALEABLE		N/A	N/A	N/A	N/A
								11	-	-	-	-	-	-	-	19	20						
MX150 ASSY RCP 2X10 BK A/6	334722571	A-BLACK	GCP	PLR		M	R	1	-	-	-	-	-	-	8	9	10	SALEABLE		N/A	N/A	N/A	N/A
								11	12	13	14	15	16	17	18	19	20						
MX150 ASSY RCP 2X10 BK A/15	334722572	A-BLACK	GCP	PLR		M	R	1	-	-	-	-	6	-	-	-	-	SALEABLE		N/A	N/A	N/A	N/A
								11	-	-	-	-	-	-	-	19	20						
MX150 ASSY RCP 2X10 BK A/5	334722573	A-BLACK	GCP	PLR		M	R	1	-	-	-	-	6	-	8	9	10	SALEABLE		N/A	N/A	N/A	N/A
								11	12	13	14	15	16	17	18	19	20						
MX150 ASSY RCP 2X10 BK A/8	334722574	A-BLACK	GCP	PLR		M	R	1	-	-	-	-	-	-	8	9	10	SALEABLE		N/A	N/A	N/A	N/A
								-	12	-	14	15	16	17	18	19	20						
MX150 ASSY RCP 2X10 BK A/12	334722575	A-BLACK	GCP	PLR		M	R	1	-	-	-	-	-	-	-	-	-	SALEABLE		N/A	N/A	N/A	N/A
								-	-	-	14	15	16	17	18	19	20						
MX150 ASSY RCP 2X10 BK A/11	334722576	A-BLACK	GCP	PLR		M	R	1	-	-	-	-	6	-	-	-	-	SALEABLE		N/A	N/A	N/A	N/A
								-	-	-	14	15	16	17	18	19	20						
MX150 ASSY RCP 2X10 BK A/7	334722577	A-BLACK	GCP	PLR		M	R	1	-	-	-	-	6	-	8	9	10	SALEABLE		N/A	N/A	N/A	N/A
								-	12	-	14	15	16	17	18	19	20						
MX150 ASSY RCP 2X10 BK A/16	334722578	A-BLACK	GCP	PLR		M	R	1	2	3	-	-	-	-	-	9	-	SALEABLE		N/A	N/A	N/A	N/A
								-	-	-	-	-	-	-	-	-	-						
MX150 ASSY RCP 2X10 BK A/11	334722579	A-BLACK	GCP	PLR		M	R	1	2	3	-	-	-	-	-	-	-	SALEABLE		N/A	N/A	N/A	N/A
								-	-	13	14	15	16	17	18	-	-						

molex

MX150 RECEPTACLE 2X10 SEALED ASSEMBLY MAT SEAL
BOM AND PIN OUT SHEET

ASSEMBLY DESCRIPTION	ASSEMBLY PART NUMBER	COMPONENT						BLOCKED TERMINALS										STATUS	COMMENT	OPTIONAL ATTACHMENTS SOLD SEPARATELY			
		THE PRESENCE OF AN ABBREVIATION INDICATES THE PRESENCE OF THAT COMPONENT						CAVITY WITH A NUMBER INDICATES BLOCKED TERMINAL POSITION CAVITY WITHOUT A NUMBER INDICATES OPEN TERMINAL POSITION															
		HOUSING KEY/COLOR	GROMMET CAP	PLR	CPA	MAT SEAL	RING SEAL													BACKSHELL WITH RIBS	BACKSHELL WITHOUT RIBS	90^0 ADAPTOR WITH RIBS	90^0 ADAPTOR WITHOUT RIBS
MX150 ASSY RCP 2X10 BK A/18	334722580	A-BLACK	GCP	PLR		M	R	-	-	3	-	-	-	-	-	9	-	SALEABLE		N/A	N/A	N/A	N/A
								-	-	-	-	-	-	-	-	-	-						
MX150 ASSY RCP 2X10 BK A/12	334722581	A-BLACK	GCP	PLR		M	R	-	-	3	-	-	-	-	-	9	-	SALEABLE		N/A	N/A	N/A	N/A
								-	-	13	14	15	16	17	18	-	-						
MX150 ASSY RCP 2X10 BK A/9	334722582	A-BLACK	GCP	PLR		M	R	1	-	3	-	-	6	7	8	-	10	SALEABLE		N/A	N/A	N/A	N/A
								11	-	-	-	-	-	17	18	19	20						
MX150 ASSY RCP 2X10 BK A/6	334722583	A-BLACK	GCP	PLR		M	R	1	-	3	4	5	6	7	8	-	10	SALEABLE		N/A	N/A	N/A	N/A
								11	12	-	-	-	-	17	18	19	20						
MX150 ASSY RCP 2X10 BK A/5	334722584	A-BLACK	GCP	PLR		M	R	1	2	3	4	5	6	7	8	-	10	SALEABLE		N/A	N/A	N/A	N/A
								11	12	-	-	-	-	17	18	19	20						
MX150 ASSY RCP 2X10 BK A/9	334722585	A-BLACK	GCP	PLR		M	R	1	-	3	4	5	-	-	-	-	10	SALEABLE		N/A	N/A	N/A	N/A
								11	12	-	-	-	-	17	18	19	20						
MX150 ASSY RCP 2X10 BK A/8	334722586	A-BLACK	GCP	PLR		M	R	1	-	3	4	5	-	-	8	-	10	SALEABLE		N/A	N/A	N/A	N/A
								11	12	-	-	-	-	17	18	19	20						
MX150 ASSY RCP 2X10 BK A/7	334722587	A-BLACK	GCP	PLR		M	R	1	2	3	4	5	-	-	8	-	10	SALEABLE		N/A	N/A	N/A	N/A
								11	12	-	-	-	-	17	18	19	20						
MX150 ASSY RCP 2X10 BK A/11	334722588	A-BLACK	GCP	PLR		M	R	1	-	3	-	-	-	-	8	-	10	SALEABLE		N/A	N/A	N/A	N/A
								11	-	-	-	-	-	17	18	19	20						
MX150 ASSY RCP 2X10 BK A/8	334722589	A-BLACK	GCP	PLR		M	R	1	2	3	4	5	-	-	-	-	10	SALEABLE		N/A	N/A	N/A	N/A
								11	12	-	-	-	-	17	18	19	20						
MX150 ASSY RCP 2X10 BK A/8	334722590	A-BLACK	GCP	PLR		M	R	-	2	3	4	-	-	7	8	-	-	SALEABLE		N/A	N/A	N/A	N/A
								-	12	-	-	15	16	17	18	19	20						
MX150 ASSY RCP 2X10 BK A/14	334722591	A-BLACK	GCP	PLR		M	R	-	-	-	-	5	-	-	8	-	-	SALEABLE		N/A	N/A	N/A	N/A
								11	-	-	14	-	16	17	-	-	-						
MX150 ASSY RCP 2X10 BK A/15	334722592	A-BLACK	GCP	PLR		M	R	-	-	-	4	-	6	-	-	-	-	SALEABLE		N/A	N/A	N/A	N/A
								11	12	13	-	-	-	-	-	-	-						
MX150 ASSY RCP 2X10 BK A/10	334722593	A-BLACK	GCP	PLR		M	R	-	2	-	4	5	-	-	-	9	-	SALEABLE		N/A	N/A	N/A	N/A
								11	12	13	14	15	16	-	-	-	-						
MX150 ASSY RCP 2X10 BK A/17	334722594	A-BLACK	GCP	PLR		M	R	-	-	3	-	-	-	-	-	9	-	SALEABLE		N/A	N/A	N/A	N/A
								-	-	-	-	-	-	-	-	-	20						
MX150 ASSY RCP 2X10 BK A/9	334722595	A-BLACK	GCP	PLR		M	R	1	2	-	4	5	-	-	-	-	10	SALEABLE		N/A	N/A	N/A	N/A
								11	12	-	-	-	-	17	18	19	20						
MX150 ASSY RCP 2X10 BK A/12	334722596	A-BLACK	GCP	PLR		M	R	1	-	-	-	-	-	-	8	-	10	SALEABLE		N/A	N/A	N/A	N/A
								11	-	-	-	-	-	17	18	19	20						
MX150 ASSY RCP 2X10 BK A/8	334722597	A-BLACK	GCP	PLR		M	R	1	2	-	4	5	-	-	8	-	10	SALEABLE		N/A	N/A	N/A	N/A
								11	12	-	-	-	-	17	18	19	20						
MX150 ASSY RCP 2X10 BK A/9	334722598	A-BLACK	GCP	PLR		M	R	1	-	-	4	5	-	-	8	-	10	SALEABLE		N/A	N/A	N/A	N/A
								11	12	-	-	-	-	17	18	19	20						
MX150 ASSY RCP 2X10 BK A/13	334722599	A-BLACK	GCP	PLR		M	R	1	-	-	4	5	-	-	-	-	-	SALEABLE		N/A	N/A	N/A	N/A
								11	12	-	-	-	-	17	18	-	-						
MX150 ASSY RCP 2X10 BK A/6	334722600	A-BLACK	GCP	PLR		M	R	1	2	-	4	5	6	7	8	-	10	SALEABLE		N/A	N/A	N/A	N/A
								11	12	-	-	-	-	17	18	19	20						
MX150 ASSY RCP 2X10 BK A/9	334722601	A-BLACK	GCP	PLR		M	R	1	2	-	-	-	6	7	8	-	10	SALEABLE		N/A	N/A	N/A	N/A
								11	-	-	-	-	-	17	18	19	20						
MX150 ASSY RCP 2X10 BK A/7	334722602	A-BLACK	GCP	PLR		M	R	1	-	-	4	5	6	7	8	-	10	SALEABLE		N/A	N/A	N/A	N/A
								11	12	-	-	-	-	17	18	19	20						
MX150 ASSY RCP 2X10 BK A/10	334722603	A-BLACK	GCP	PLR		M	R	1	-	-	-	-	6	7	8	-	10	SALEABLE		N/A	N/A	N/A	N/A
								11	-	-	-	-	-	17	18	19	20						
MX150 ASSY RCP 2X10 CPA BK A/14	334722604	A-BLACK	GCP	PLR	CPA	M	R	-	-	-	-	-	-	-	8	9	-	SALEABLE		N/A	N/A	N/A	N/A
								-	-	-	-	-	-	17	18	19	20						
MX150 ASSY RCP 2X10 CPA BK A/18	334722605	A-BLACK	GCP	PLR	CPA	M	R	-	-	-	-	-	-	-	-	-	10	SALEABLE		N/A	N/A	N/A	N/A
								-	-	-	-	15	-	-	-	-	-						
MX150 ASSY RCP 2X10 LG B/18	334722606	B-LIGHT GRAY	GCP	PLR		M	R	-	-	-	-	-	6	-	-	-	-	SALEABLE		N/A	N/A	N/A	N/A
								-	-	-	-	-	-	-	-	19	-						

molex

MX150 RECEPTACLE 2X10 SEALED ASSEMBLY MAT SEAL
BOM AND PIN OUT SHEET

ASSEMBLY DESCRIPTION	ASSEMBLY PART NUMBER	COMPONENT						BLOCKED TERMINALS										STATUS	COMMENT	OPTIONAL ATTACHMENTS SOLD SEPARATELY			
		THE PRESENCE OF AN ABBREVIATION INDICATES THE PRESENCE OF THAT COMPONENT						CAVITY WITH A NUMBER INDICATES BLOCKED TERMINAL POSITION CAVITY WITHOUT A NUMBER INDICATES OPEN TERMINAL POSITION															
		HOUSING KEY/COLOR	GROMMET CAP	PLR	CPA	MAT SEAL	RING SEAL													BACKSHELL WITH RIBS	BACKSHELL WITHOUT RIBS	90^0 ADAPTOR WITH RIBS	90^0 ADAPTOR WITHOUT RIBS
MX150 ASSY RCP 2X10 BK A/18	334722607	A-BLACK	GCP	PLR		M	R	-	-	-	-	-	6	-	-	-	-	SALEABLE		N/A	N/A	N/A	N/A
								-	-	-	-	-	-	-	-	19	-						
MX150 ASSY RCP 2X10 BK A/10	334722608	A-BLACK	GCP	PLR		M	R	1	-	-	4	5	-	-	-	-	10	SALEABLE		N/A	N/A	N/A	N/A
								11	12	-	-	-	-	17	18	19	20						
MX150 ASSY RCP 2X10 BK A/12	334722609	A-BLACK	GCP	PLR		M	R	-	-	-	-	5	6	-	-	-	-	SALEABLE		N/A	N/A	N/A	N/A
								11	12	13	-	-	-	-	18	19	20						
MX150 ASSY RCP 2X10 BK A/8	334722610	A-BLACK	GCP	PLR		M	R	-	-	-	4	5	6	-	-	-	10	SALEABLE		N/A	N/A	N/A	N/A
								11	12	13	-	-	16	17	18	19	20						
MX150 ASSY RCP 2X10 CS BK A/11	334722611	A-BLACK-CLIP	GCP	PLR		M	R	-	-	-	-	5	6	7	8	9	-	SALEABLE		34951-2011	34951-2021	34951-1631	34951-1641
								11	12	-	-	-	-	17	18	-	-						
MX150 ASSY RCP 2X10 BK A/10	334722612	A-BLACK	GCP	PLR		M	R	1	2	3	-	-	-	-	-	9	-	SALEABLE		N/A	N/A	N/A	N/A
								-	-	13	14	15	16	17	18	-	-						
MX150 ASSY RCP 2X10 BK A/11	334722613	A-BLACK	GCP	PLR		M	R	1	2	-	-	-	-	-	8	-	10	SALEABLE		N/A	N/A	N/A	N/A
								11	-	-	-	-	-	17	18	19	20						
MX150 ASSY RCP 2X10 BK A/8	334722614	A-BLACK	GCP	PLR		M	R	-	-	-	-	-	-	7	8	9	10	SALEABLE		N/A	N/A	N/A	N/A
								11	12	13	14	15	16	17	18	-	-						
MX150 ASSY RCP 2X10 BK A/13	334722615	A-BLACK	GCP	PLR		M	R	-	-	3	-	-	-	-	-	-	-	SALEABLE		N/A	N/A	N/A	N/A
								11	-	-	-	-	16	17	18	19	20						
MX150 ASSY RCP 2X10 LG B/8	334722616	B-LIGHT GRAY	GCP	PLR		M	R	-	2	-	-	-	-	-	-	-	10	SALEABLE		N/A	N/A	N/A	N/A
								11	12	13	14	15	16	17	18	19	20						
MX150 ASSY RCP 2X10 CS CPA BK A/12	334722617	A-BLACK-CLIP	GCP	PLR	CPA	M	R	-	2	-	-	-	-	7	8	9	-	SALEABLE		34951-2011	34951-2021	34951-1631	34951-1641
								-	12	-	-	15	-	-	18	19	-						
MX150 ASSY RCP 2X10 CPA BK A/18	334722618	A-BLACK	GCP	PLR	CPA	M	R	1	-	-	-	-	-	-	-	-	-	SALEABLE		N/A	N/A	N/A	N/A
								-	-	-	-	-	-	-	18	-	-						
MX150 ASSY RCP 2X10 CPA BK A/12	334722619	A-BLACK	GCP	PLR	CPA	M	R	1	2	-	-	5	6	7	8	-	-	SALEABLE		N/A	N/A	N/A	N/A
								-	-	-	-	-	-	17	18	-	-						
MX150 ASSY RCP 2X10 CPA BK A/12	334722620	A-BLACK	GCP	PLR	CPA	M	R	-	2	-	-	5	6	7	8	-	-	SALEABLE		N/A	N/A	N/A	N/A
								-	-	-	-	-	-	-	18	19	20						
MX150 ASSY RCP 2X10 CPA BK A/6	334722621	A-BLACK	GCP	PLR	CPA	M	R	1	2	-	-	5	6	7	8	9	10	SALEABLE		N/A	N/A	N/A	N/A
								11	12	13	14	-	-	17	18	-	-						
MX150 ASSY RCP 2X10 BK A/14	334722622	A-BLACK	GCP	PLR		M	R	-	-	-	-	-	-	-	-	9	10	SALEABLE		N/A	N/A	N/A	N/A
								11	-	-	14	-	-	17	18	-	-						
MX150 ASSY RCP 2X10 BK A/16	334722623	A-BLACK	GCP	PLR		M	R	-	-	-	-	-	-	-	-	9	10	SALEABLE		N/A	N/A	N/A	N/A
								11	-	-	14	-	-	-	-	-	-						
MX150 ASSY RCP 2X10 BK A/15	334722624	A-BLACK	GCP	PLR		M	R	-	-	-	-	-	-	-	8	9	10	SALEABLE		N/A	N/A	N/A	N/A
								11	-	-	14	-	-	-	-	-	-						
MX150 ASSY RCP 2X10 BK A/14	334722625	A-BLACK	GCP	PLR		M	R	-	-	-	-	-	-	-	8	9	10	SALEABLE		N/A	N/A	N/A	N/A
								-	-	-	14	-	-	17	18	-	-						
MX150 ASSY RCP 2X10 CS BK A/8	334722626	A-BLACK-CLIP	GCP	PLR		M	R	1	2	3	4	5	6	-	8	-	-	SALEABLE		34951-2011	34951-2021	34951-1631	34951-1641
								-	-	13	-	-	-	17	18	19	20						
MX150 ASSY RCP 2X10 CS BK A/10	334722627	A-BLACK-CLIP	GCP	PLR		M	R	1	2	3	4	5	6	-	8	-	-	SALEABLE		34951-2011	34951-2021	34951-1631	34951-1641
								-	-	13	-	-	-	-	-	19	20						
MX150 ASSY RCP 2X10 CS BK A/14	334722628	A-BLACK-CLIP	GCP	PLR		M	R	-	-	-	-	-	-	7	-	9	-	SALEABLE		34951-2011	34951-2021	34951-1631	34951-1641
								-	-	-	14	15	-	-	-	19	20						
MX150 ASSY RCP 2X10 CPA BK A/12	334722629	A-BLACK	GCP	PLR	CPA	M	R	-	2	-	-	-	-	-	8	9	-	SALEABLE		N/A	N/A	N/A	N/A
								-	-	13	14	-	-	-	18	19	20						
MX150 ASSY RCP 2X10 CPA BK A/14	334722630	A-BLACK	GCP	PLR	CPA	M	R	-	2	-	-	-	-	-	-	-	-	SALEABLE		N/A	N/A	N/A	N/A
								-	-	13	14	-	-	-	18	19	20						
MX150 ASSY RCP 2X10 CPA BK A/16	334722631	A-BLACK	GCP	PLR	CPA	M	R	-	-	3	-	-	6	-	8	9	-	SALEABLE		N/A	N/A	N/A	N/A
								-	-	-	-	-	-	-	-	-	-						
MX150 ASSY RCP 2X10 CS CPA BK A/10	334722632	A-BLACK-CLIP	GCP	PLR	CPA	M	R	-	2	3	-	-	6	-	-	-	-	SALEABLE		34951-2011	34951-2021	34951-1631	34951-1641
								11	12	-	-	-	16	17	18	19	20						
MX150 ASSY RCP 2X10 BK A/6	334722633	A-BLACK	GCP	PLR		M	R	-	-	-	4	5	-	-	-	9	10	SALEABLE		N/A	N/A	N/A	N/A
								11	12	13	14	15	16	17	18	19	20						

molex

MX150 RECEPTACLE 2X10 SEALED ASSEMBLY MAT SEAL
BOM AND PIN OUT SHEET

ASSEMBLY DESCRIPTION	ASSEMBLY PART NUMBER	COMPONENT: THE PRESENCE OF AN ABBREVIATION INDICATES THE PRESENCE OF THAT COMPONENT						BLOCKED TERMINALS: CAVITY WITH A NUMBER INDICATES BLOCKED TERMINAL POSITION; CAVITY WITHOUT A NUMBER INDICATES OPEN TERMINAL POSITION										STATUS	COMMENT	OPTIONAL ATTACHMENTS SOLD SEPARATELY			
		HOUSING KEY/COLOR	GROMMET CAP	PLR	CPA	MAT SEAL	RING SEAL													BACKSHELL WITH RIBS	BACKSHELL WITHOUT RIBS	90° ADAPTOR WITH RIBS	90° ADAPTOR WITHOUT RIBS
MX150 ASSY RCP 2X10 CS BK A/10	334722634	A-BLACK-CLIP	GCP	PLR		M	R	1	-	-	-	-	-	7	8	-	10	SALEABLE		34951-2011	34951-2021	34951-1631	34951-1641
								11	-	13	-	15	-	-	18	19	20						
MX150 ASSY RCP 2X10 CS CPA BK A/19	334722635	A-BLACK-CLIP	GCP	PLR	CPA	M	R	1	-	-	-	-	-	-	-	-	-	SALEABLE		34951-2011	34951-2021	34951-1631	34951-1641
								-	-	-	-	-	-	-	-	-	-						
MX150 ASSY RCP 2X10 CS LG B/19	334722636	B-LIGHT GRAY-CLIP	GCP	PLR		M	R	1	-	-	-	-	-	-	-	-	-	SALEABLE		34951-2011	34951-2021	34951-1631	34951-1641
								-	-	-	-	-	-	-	-	-	-						
MX150 ASSY RCP 2X10 CS CPA LG B/19	334722637	B-LIGHT GRAY-CLIP	GCP	PLR	CPA	M	R	1	-	-	-	-	-	-	-	-	-	SALEABLE		34951-2011	34951-2021	34951-1631	34951-1641
								-	-	-	-	-	-	-	-	-	-						
MX150 ASSY RCP 2X10 CPA DG C/19	334722638	C-DARK GRAY	GCP	PLR	CPA	M	R	1	-	-	-	-	-	-	-	-	-	SALEABLE		N/A	N/A	N/A	N/A
								-	-	-	-	-	-	-	-	-	-						
MX150 ASSY RCP 2X10 CS DG C/19	334722639	C-DARK GRAY-CLIP	GCP	PLR		M	R	1	-	-	-	-	-	-	-	-	-	SALEABLE		34951-2011	34951-2021	34951-1631	34951-1641
								-	-	-	-	-	-	-	-	-	-						
MX150 ASSY RCP 2X10 DG C/19	334722640	C-DARK GRAY	GCP	PLR		M	R	1	-	-	-	-	-	-	-	-	-	SALEABLE		N/A	N/A	N/A	N/A
								-	-	-	-	-	-	-	-	-	-						
MX150 ASSY RCP 2X10 CS CPA DG C/19	334722641	C-DARK GRAY-CLIP	GCP	PLR	CPA	M	R	1	-	-	-	-	-	-	-	-	-	SALEABLE		34951-2011	34951-2021	34951-1631	34951-1641
								-	-	-	-	-	-	-	-	-	-						
MX150 ASSY RCP 2X10 CS SG D/19	334722642	D-STONE GRAY-CLIP	GCP	PLR		M	R	1	-	-	-	-	-	-	-	-	-	SALEABLE		34951-2011	34951-2021	34951-1631	34951-1641
								-	-	-	-	-	-	-	-	-	-						
MX150 ASSY RCP 2X10 SG D/19	334722643	D-STONE GRAY	GCP	PLR		M	R	1	-	-	-	-	-	-	-	-	-	SALEABLE		N/A	N/A	N/A	N/A
								-	-	-	-	-	-	-	-	-	-						
MX150 ASSY RCP 2X10 CS CPA SG D/19	334722644	D-STONE GRAY-CLIP	GCP	PLR	CPA	M	R	1	-	-	-	-	-	-	-	-	-	SALEABLE		34951-2011	34951-2021	34951-1631	34951-1641
								-	-	-	-	-	-	-	-	-	-						
MX150 ASSY RCP 2X10 CPA SG D/19	334722645	D-STONE GRAY	GCP	PLR	CPA	M	R	1	-	-	-	-	-	-	-	-	-	SALEABLE		N/A	N/A	N/A	N/A
								-	-	-	-	-	-	-	-	-	-						
MX150 ASSY RCP 2X10 CPA BK A/13	334722646	A-BLACK	GCP	PLR	CPA	M	R	-	2	-	-	-	-	-	-	-	-	SALEABLE		N/A	N/A	N/A	N/A
								11	12	-	-	-	16	17	18	19	-						
MX150 ASSY RCP 2X10 BK A/12	334722647	A-BLACK	GCP	PLR		M	R	-	-	-	-	-	-	-	-	9	-	SALEABLE		N/A	N/A	N/A	N/A
								-	12	13	-	15	16	17	18	19	-						
MX150 ASSY RCP 2X10 CS CPA BK A/17	334722648	A-BLACK-CLIP	GCP	PLR	CPA	M	R	1	2	-	4	-	-	-	-	-	-	SALEABLE		34951-2011	34951-2021	34951-1631	34951-1641
								-	-	-	-	-	-	-	-	-	-						
MX150 ASSY RCP 2X10 CS CPA BK A/16	334722649	A-BLACK-CLIP	GCP	PLR	CPA	M	R	-	-	-	-	-	-	-	-	-	-	SALEABLE		34951-2011	34951-2021	34951-1631	34951-1641
								-	12	13	14	-	-	-	-	-	20						
MX150 ASSY RCP 2X10 CS CPA BK A/11	334722650	A-BLACK-CLIP	GCP	PLR	CPA	M	R	1	2	-	-	5	-	-	-	9	-	SALEABLE		34951-2011	34951-2021	34951-1631	34951-1641
								-	-	13	14	15	16	17	-	-	-						
MX150 ASSY RCP 2X10 CS CPA LG B/11	334722651	B-LIGHT GRAY-CLIP	GCP	PLR	CPA	M	R	1	2	-	-	5	-	-	-	9	-	SALEABLE		34951-2011	34951-2021	34951-1631	34951-1641
								-	-	13	14	15	16	17	-	-	-						
MX150 ASSY RCP 2X10 BK A/16	334722652	A-BLACK	GCP	PLR		M	R	1	2	-	-	-	-	-	-	-	-	SALEABLE		N/A	N/A	N/A	N/A
								-	-	-	-	-	-	-	-	19	20						
MX150 ASSY RCP 2X10 CS BK A/13	334722653	A-BLACK-CLIP	GCP	PLR		M	R	-	-	3	-	-	-	-	-	-	-	SALEABLE		34951-2011	34951-2021	34951-1631	34951-1641
								11	-	-	-	-	16	17	18	19	20						
MX150 ASSY RCP 2X10 CS CPA BK A/3	334722654	A-BLACK-CLIP	GCP	PLR	CPA	M	R	1	-	3	4	5	6	7	8	-	-	SALEABLE		34951-2011	34951-2021	34951-1631	34951-1641
								11	12	13	14	15	16	17	18	19	20						
MX150 ASSY RCP 2X10 CS CPA BK A/17	334722655	A-BLACK-CLIP	GCP	PLR	CPA	M	R	1	-	-	4	-	-	-	-	-	-	SALEABLE		34951-2011	34951-2021	34951-1631	34951-1641
								-	-	13	-	-	-	-	-	-	-						
MX150 ASSY RCP 2X10 CS CPA BK A/8	334722656	A-BLACK-CLIP	GCP	PLR	CPA	M	R	1	-	3	-	-	-	-	-	9	10	SALEABLE		34951-2011	34951-2021	34951-1631	34951-1641
								11	12	13	-	-	16	17	18	19	20						
MX150 ASSY RCP 2X10 CPA BK A/14	334722657	A-BLACK	GCP	PLR	CPA	M	R	-	2	-	-	5	6	7	8	-	-	SALEABLE		N/A	N/A	N/A	N/A
								-	-	-	-	-	-	-	18	-	-						
MX150 ASSY RCP 2X10 BK A/13	334722658	A-BLACK	GCP	PLR		M	R	-	-	-	-	-	-	-	-	9	-	SALEABLE		N/A	N/A	N/A	N/A
								-	12	13	-	-	16	17	18	19	-						
MX150 ASSY RCP 2X10 CPA BK A/13	334722659	A-BLACK	GCP	PLR	CPA	M	R	-	-	-	-	-	-	-	-	9	-	SALEABLE		N/A	N/A	N/A	N/A
								-	12	13	-	-	16	17	18	19	-						
MX150 ASSY RCP 2X10 CPA BK A/9	334722660	A-BLACK	GCP	PLR	CPA	M	R	1	2	-	-	-	-	-	-	-	-	SALEABLE		N/A	N/A	N/A	N/A
								-	12	13	14	15	16	17	18	19	20						

molex

MX150 RECEPTACLE 2X10 SEALED ASSEMBLY MAT SEAL
BOM AND PIN OUT SHEET

ASSEMBLY DESCRIPTION	ASSEMBLY PART NUMBER	COMPONENT: THE PRESENCE OF AN ABBREVIATION INDICATES THE PRESENCE OF THAT COMPONENT						BLOCKED TERMINALS: CAVITY WITH A NUMBER INDICATES BLOCKED TERMINAL POSITION; CAVITY WITHOUT A NUMBER INDICATES OPEN TERMINAL POSITION										STATUS	COMMENT	OPTIONAL ATTACHMENTS SOLD SEPARATELY			
		HOUSING KEY/COLOR	GROMMET CAP	PLR	CPA	MAT SEAL	RING SEAL													BACKSHELL WITH RIBS	BACKSHELL WITHOUT RIBS	90° ADAPTOR WITH RIBS	90° ADAPTOR WITHOUT RIBS
MX150 ASSY RCP 2X10 LG B/9	334722661	B-LIGHT GRAY	GCP	PLR		M	R	1	2	3	4	-	-	7	8	9	-	SALEABLE		N/A	N/A	N/A	N/A
								-	12	13	-	-	-	-	18	19	-						
MX150 ASSY RCP 2X10 LG B/15	334722662	B-LIGHT GRAY	GCP	PLR		M	R	-	-	3	4	-	-	7	-	-	-	SALEABLE		N/A	N/A	N/A	N/A
								-	-	13	-	-	-	-	18	-	-						
MX150 ASSY RCP 2X10 LG B/17	334722663	B-LIGHT GRAY	GCP	PLR		M	R	-	-	-	4	-	-	7	-	-	-	SALEABLE		N/A	N/A	N/A	N/A
								-	-	-	-	-	-	-	18	-	-						
MX150 ASSY RCP 2X10 CPA BK A/12	334722664	A-BLACK	GCP	PLR	CPA	M	R	1	2	-	-	5	6	7	8	-	-	SALEABLE		N/A	N/A	N/A	N/A
								-	-	-	-	-	-	-	-	19	20						
MX150 ASSY RCP 2X10 CPA BK A/14	334722665	A-BLACK	GCP	PLR	CPA	M	R	-	-	-	-	5	6	7	8	-	-	SALEABLE		N/A	N/A	N/A	N/A
								-	-	-	-	-	-	-	-	19	20						
MX150 ASSY RCP 2X10 BK A/14	334722666	A-BLACK	GCP	PLR		M	R	-	-	-	-	-	-	7	-	9	-	SALEABLE		N/A	N/A	N/A	N/A
								-	-	-	14	15	-	-	-	19	20						
MX150 ASSY RCP 2X10 CS BK A/16	334722667	A-BLACK-CLIP	GCP	PLR		M	R	1	2	-	-	-	-	-	-	-	-	SALEABLE		34951-2011	34951-2021	34951-1631	34951-1641
								-	-	-	-	-	-	-	-	19	20						
MX150 ASSY RCP 2X10 BK A/15	334722668	A-BLACK	GCP	PLR		M	R	-	2	-	4	5	-	-	-	9	-	SALEABLE		N/A	N/A	N/A	N/A
								-	-	-	-	-	16	-	-	-	-						
MX150 ASSY RCP 2X10 CPA BK A/11	334722669	A-BLACK	GCP	PLR	CPA	M	R	-	-	-	-	-	-	-	8	-	-	SALEABLE		N/A	N/A	N/A	N/A
								11	12	-	-	15	16	17	18	19	20						
MX150 ASSY RCP 2X10 LG B/6	334722670	B-LIGHT GRAY	GCP	PLR		M	R	1	2	3	4	5	6	7	8	9	-	SALEABLE		N/A	N/A	N/A	N/A
								-	12	13	-	-	-	-	18	19	20						
MX150 ASSY RCP 2X10 LG B/12	334722671	B-LIGHT GRAY	GCP	PLR		M	R	-	-	3	4	5	6	7	-	-	-	SALEABLE		N/A	N/A	N/A	N/A
								-	-	13	-	-	-	-	18	-	20						
MX150 ASSY RCP 2X10 LG B/14	334722672	B-LIGHT GRAY	GCP	PLR		M	R	-	-	-	4	5	6	7	-	-	-	SALEABLE		N/A	N/A	N/A	N/A
								-	-	-	-	-	-	-	18	-	20						
MX150 ASSY RCP 2X10 CPA BK A/17	334722673	A-BLACK	GCP	PLR	CPA	M	R	-	-	-	-	-	-	-	8	-	-	SALEABLE		N/A	N/A	N/A	N/A
								11	12	-	-	-	-	-	-	-	-						
MX150 ASSY RCP 2X10 CPA LG B/0	334722674	B-LIGHT GRAY	GCP	PLR	CPA	M	R	1	2	3	4	5	6	7	8	9	10	SALEABLE		N/A	N/A	N/A	N/A
								11	12	13	14	15	16	17	18	19	20						
MX150 ASSY RCP 2X10 CPA LG B/13	334722675	B-LIGHT GRAY	GCP	PLR	CPA	M	R	-	2	3	4	-	-	7	-	-	-	SALEABLE		N/A	N/A	N/A	N/A
								-	12	13	-	15	-	-	-	-	-						
MX150 ASSY RCP 2X10 CPA BK A/16	334722676	A-BLACK	GCP	PLR	CPA	M	R	-	-	-	-	-	6	-	8	9	-	SALEABLE		N/A	N/A	N/A	N/A
								-	-	13	-	-	-	-	-	-	-						
MX150 ASSY RCP 2X10 CPA BK A/11	334722677	A-BLACK	GCP	PLR	CPA	M	R	1	2	-	-	-	-	-	-	-	-	SALEABLE		N/A	N/A	N/A	N/A
								-	-	-	14	15	16	17	18	19	20						
MX150 ASSY RCP 2X10 CPA BK A/11	334722678	A-BLACK	GCP	PLR	CPA	M	R	1	2	-	-	5	-	-	-	9	-	SALEABLE		N/A	N/A	N/A	N/A
								-	-	13	14	15	16	17	-	-	-						
MX150 ASSY RCP 2X10 BK A/8	334722679	A-BLACK	GCP	PLR		M	R	1	2	3	4	5	6	-	8	-	-	SALEABLE		N/A	N/A	N/A	N/A
								-	-	13	-	-	-	17	18	19	20						
MX150 ASSY RCP 2X10 BK A/10	334722680	A-BLACK	GCP	PLR		M	R	1	2	3	4	5	6	-	8	-	-	SALEABLE		N/A	N/A	N/A	N/A
								-	-	13	-	-	-	-	-	19	20						
MX150 ASSY RCP 2X10 BK A/13	334722681	A-BLACK	GCP	PLR		M	R	-	-	-	-	-	-	-	8	-	-	SALEABLE		N/A	N/A	N/A	N/A
								-	-	-	-	15	16	17	18	19	20						
MX150 ASSY RCP 2X10 CPA BK A/13	334722682	A-BLACK	GCP	PLR	CPA	M	R	-	-	-	-	-	-	-	8	-	-	SALEABLE		N/A	N/A	N/A	N/A
								-	-	-	-	15	16	17	18	19	20						
MX150 ASSY RCP 2X10 CPA BK A/9	334722683	A-BLACK	GCP	PLR	CPA	M	R	-	-	-	-	5	6	-	-	-	10	SALEABLE		N/A	N/A	N/A	N/A
								-	12	13	-	15	16	17	18	19	20						
MX150 ASSY RCP 2X10 BK A/8	334722684	A-BLACK	GCP	PLR		M	R	1	2	-	-	-	-	-	-	9	10	SALEABLE		N/A	N/A	N/A	N/A
								-	-	13	14	15	16	17	18	19	20						
MX150 ASSY RCP 2X10 BK A/8	334722685	A-BLACK	GCP	PLR		M	R	1	2	-	-	-	-	-	-	-	-	SALEABLE		N/A	N/A	N/A	N/A
								11	12	13	14	15	16	17	18	19	20						
MX150 ASSY RCP 2X10 BK A/19	334722686	A-BLACK	GCP	PLR		M	R	-	-	3	-	-	-	-	-	-	-	SALEABLE		N/A	N/A	N/A	N/A
								-	-	-	-	-	-	-	-	-	-						
MX150 ASSY RCP 2X10 BK A/18	334722687	A-BLACK	GCP	PLR		M	R	-	-	-	-	-	-	-	-	9	10	SALEABLE		N/A	N/A	N/A	N/A
								-	-	-	-	-	-	-	-	-	-						

molex

MX150 RECEPTACLE 2X10 SEALED ASSEMBLY MAT SEAL
BOM AND PIN OUT SHEET

ASSEMBLY DESCRIPTION	ASSEMBLY PART NUMBER	COMPONENT THE PRESENCE OF AN ABBREVIATION INDICATES THE PRESENCE OF THAT COMPONENT						BLOCKED TERMINALS CAVITY WITH A NUMBER INDICATES BLOCKED TERMINAL POSITION CAVITY WITHOUT A NUMBER INDICATES OPEN TERMINAL POSITION										STATUS	COMMENT	OPTIONAL ATTACHMENTS SOLD SEPARATELY			
		HOUSING KEY/COLOR	GROMMET CAP	PLR	CPA	MAT SEAL	RING SEAL													BACKSHELL WITH RIBS	BACKSHELL WITHOUT RIBS	90^0 ADAPTOR WITH RIBS	90^0 ADAPTOR WITHOUT RIBS
MX150 ASSY RCP 2X10 CPA BK A/10	334722688	A-BLACK	GCP	PLR	CPA	M	R	1	2	-	-	-	-	7	8	9	10	SALEABLE		N/A	N/A	N/A	N/A
								11	12	-	-	-	-	17	18	-	-						
MX150 ASSY RCP 2X10 BK A/13	334722689	A-BLACK	GCP	PLR		M	R	-	-	-	-	-	6	-	8	9	-	SALEABLE		N/A	N/A	N/A	N/A
								11	-	-	14	15	16	-	-	-	-						
MX150 ASSY RCP 2X10 BK A/18	334722690	A-BLACK	GCP	PLR		M	R	1	-	-	-	-	-	-	-	-	-	SALEABLE		N/A	N/A	N/A	N/A
								-	-	-	-	-	-	-	-	-	20						
MX150 ASSY RCP 2X10 CS CPA BK A/15	334722691	A-BLACK-CLIP	GCP	PLR	CPA	M	R	-	2	-	-	-	-	-	-	-	-	SALEABLE		34951-2011	34951-2021	34951-1631	34951-1641
								-	12	-	-	15	-	-	18	19	-						
MX150 ASSY RCP 2X10 CPA BK A/2	334722692	A-BLACK	GCP	PLR	CPA	M	R	-	2	3	4	5	6	7	8	9	10	SALEABLE		N/A	N/A	N/A	N/A
								11	12	13	14	15	-	17	18	19	20						
MX150 ASSY RCP 2X10 CPA BK A/6	334722693	A-BLACK	GCP	PLR	CPA	M	R	-	2	3	4	5	6	7	8	9	10	SALEABLE		N/A	N/A	N/A	N/A
								-	-	-	-	15	-	17	18	19	20						
MX150 ASSY RCP 2X10 CS CPA BK A/14	334722694	A-BLACK-CLIP	GCP	PLR	CPA	M	R	-	2	-	-	-	-	7	-	-	-	SALEABLE		34951-2011	34951-2021	34951-1631	34951-1641
								-	12	-	-	15	-	-	18	19	-						
MX150 ASSY RCP 2X10 CPA BK A/10	334722695	A-BLACK	GCP	PLR	CPA	M	R	-	-	-	-	5	6	-	-	-	-	SALEABLE		N/A	N/A	N/A	N/A
								-	12	13	-	15	16	17	18	19	20						
MX150 ASSY RCP 2X10 CS CPA YW A/14	334722696	A-YELLOW-CLIP	GCP	PLR	CPA	M	R	-	2	-	-	-	-	7	-	-	-	SALEABLE		34951-2011	34951-2021	34951-1631	34951-1641
								-	12	-	-	15	-	-	18	19	-						
MX150 ASSY RCP 2X10 CPA BK A/8	334722697	A-BLACK	GCP	PLR	CPA	M	R	1	-	-	-	-	-	-	-	-	10	SALEABLE		N/A	N/A	N/A	N/A
								11	12	13	14	15	16	17	18	19	20						
MX150 ASSY RCP 2X10 CPA BK A/14	334722698	A-BLACK	GCP	PLR	CPA	M	R	-	-	-	-	-	-	-	-	-	-	SALEABLE		N/A	N/A	N/A	N/A
								-	-	13	14	15	-	-	18	19	20						
MX150 ASSY RCP 2X10 CPA BK A/17	334722699	A-BLACK	GCP	PLR	CPA	M	R	-	-	-	-	-	-	7	-	-	-	SALEABLE		N/A	N/A	N/A	N/A
								-	-	-	-	-	-	-	-	19	20						
MX150 ASSY RCP 2X10 CPA BK A/9	334722700	A-BLACK	GCP	PLR	CPA	M	R	-	-	-	4	5	6	-	8	9	-	SALEABLE		N/A	N/A	N/A	N/A
								-	-	-	14	15	16	17	18	19	-						
MX150 ASSY RCP 2X10 CS BK A/10	334722701	A-BLACK-CLIP	GCP	PLR		M	R	-	2	-	-	-	-	-	8	9	10	SALEABLE		34951-2011	34951-2021	34951-1631	34951-1641
								11	-	-	-	-	16	17	18	19	20						
MX150 ASSY RCP 2X10 CS CPA LG B/15	334722702	B-LIGHT GRAY-CLIP	GCP	PLR	CPA	M	R	1	-	3	-	5	-	-	-	-	-	SALEABLE		34951-2011	34951-2021	34951-1631	34951-1641
								-	-	-	14	15	-	-	-	-	-						
MX150 ASSY RCP 2X10 BK A/7	334722703	A-BLACK	GCP	PLR		M	R	-	-	3	-	5	6	7	8	-	10	SALEABLE		N/A	N/A	N/A	N/A
								-	12	13	-	15	16	17	18	-	20						
MX150 ASSY RCP 2X10 CPA BK A/16	334722704	A-BLACK	GCP	PLR	CPA	M	R	1	2	-	-	-	-	-	-	-	-	SALEABLE		N/A	N/A	N/A	N/A
								-	-	-	-	-	-	-	-	19	20						
MX150 ASSY RCP 2X10 BK A/15	334722705	A-BLACK	GCP	PLR		M	R	1	2	-	-	-	-	-	-	-	-	SALEABLE		N/A	N/A	N/A	N/A
								-	-	-	-	-	-	-	18	19	20						
MX150 ASSY RCP 2X10 CS BK A/17	334722706	A-BLACK-CLIP	GCP	PLR		M	R	-	2	-	-	5	6	-	-	-	-	SALEABLE		34951-2011	34951-2021	34951-1631	34951-1641
								-	-	-	-	-	-	-	-	-	-						
MX150 ASSY RCP 2X10 CS BK A/15	334722707	A-BLACK-CLIP	GCP	PLR		M	R	-	2	-	-	5	6	7	-	-	-	SALEABLE		34951-2011	34951-2021	34951-1631	34951-1641
								-	-	-	14	-	-	-	-	-	-						
MX150 ASSY RCP 2X10 CS BK A/15	334722708	A-BLACK-CLIP	GCP	PLR		M	R	-	2	-	-	5	6	-	-	-	-	SALEABLE		34951-2011	34951-2021	34951-1631	34951-1641
								11	-	-	-	-	-	-	-	-	20						
MX150 ASSY RCP 2X10 CS BK A/14	334722709	A-BLACK-CLIP	GCP	PLR		M	R	-	2	3	-	5	6	-	-	-	-	SALEABLE		34951-2011	34951-2021	34951-1631	34951-1641
								-	12	-	-	-	-	-	-	19	-						
MX150 ASSY RCP 2X10 CS BK A/12	334722710	A-BLACK-CLIP	GCP	PLR		M	R	-	2	3	-	5	6	7	-	-	-	SALEABLE		34951-2011	34951-2021	34951-1631	34951-1641
								-	12	-	14	-	-	-	-	19	-						
MX150 ASSY RCP 2X10 CS BK A/13	334722711	A-BLACK-CLIP	GCP	PLR		M	R	-	2	-	-	5	6	7	-	-	-	SALEABLE		34951-2011	34951-2021	34951-1631	34951-1641
								11	-	-	14	-	-	-	-	-	20						
MX150 ASSY RCP 2X10 CS BK A/4	334722712	A-BLACK-CLIP	GCP	PLR		M	R	-	2	3	4	5	6	7	8	9	10	SALEABLE		34951-2011	34951-2021	34951-1631	34951-1641
								11	12	13	14	-	-	17	-	19	20						
MX150 ASSY RCP 2X10 CS BK A/7	334722713	A-BLACK-CLIP	GCP	PLR		M	R	-	2	-	4	5	6	7	8	9	10	SALEABLE		34951-2011	34951-2021	34951-1631	34951-1641
								11	-	13	14	-	-	17	-	-	20						
MX150 ASSY RCP 2X10 CS BK A/6	334722714	A-BLACK-CLIP	GCP	PLR		M	R	-	2	3	4	5	6	7	8	9	10	SALEABLE		34951-2011	34951-2021	34951-1631	34951-1641
								-	12	13	14	-	-	17	-	19	-						

molex

MX150 RECEPTACLE 2X10 SEALED ASSEMBLY MAT SEAL

BOM AND PIN OUT SHEET

ASSEMBLY DESCRIPTION	ASSEMBLY PART NUMBER	COMPONENT						BLOCKED TERMINALS										STATUS	COMMENT	OPTIONAL ATTACHMENTS SOLD SEPARATELY			
		THE PRESENCE OF AN ABBREVIATION INDICATES THE PRESENCE OF THAT COMPONENT						CAVITY WITH A NUMBER INDICATES BLOCKED TERMINAL POSITION CAVITY WITHOUT A NUMBER INDICATES OPEN TERMINAL POSITION															
		HOUSING KEY/COLOR	GROMMET CAP	PLR	CPA	MAT SEAL	RING SEAL													BACKSHELL WITH RIBS	BACKSHELL WITHOUT RIBS	90^0 ADAPTOR WITH RIBS	90^0 ADAPTOR WITHOUT RIBS
MX150 ASSY RCP 2X10 CS BK A/9	334722715	A-BLACK-CLIP	GCP	PLR		M	R	-	2	-	4	5	6	7	8	9	10	SALEABLE		34951-2011	34951-2021	34951-1631	34951-1641
								-	-	13	14	-	-	17	-	-	-						
MX150 ASSY RCP 2X10 CS BK A/12	334722716	A-BLACK-CLIP	GCP	PLR		M	R	-	2	3	-	5	6	-	-	-	-	SALEABLE		34951-2011	34951-2021	34951-1631	34951-1641
								11	12	-	-	-	-	-	-	19	20						
MX150 ASSY RCP 2X10 CS BK A/10	334722717	A-BLACK-CLIP	GCP	PLR		M	R	-	2	3	-	5	6	7	-	-	-	SALEABLE		34951-2011	34951-2021	34951-1631	34951-1641
								11	12	-	14	-	-	-	-	19	20						
MX150 ASSY RCP 2X10 CPA BK A/11	334722718	A-BLACK	GCP	PLR	CPA	M	R	-	-	-	-	-	-	-	8	-	-	SALEABLE		N/A	N/A	N/A	N/A
								-	-	13	14	15	16	17	18	19	20						
MX150 ASSY RCP 2X10 CS BK A/14	334722719	A-BLACK-CLIP	GCP	PLR		M	R	-	2	-	-	-	-	7	-	-	-	SALEABLE		34951-2011	34951-2021	34951-1631	34951-1641
								-	12	-	-	15	-	-	18	19	-						
MX150 ASSY RCP 2X10 CS BK A/8	334722720	A-BLACK-CLIP	GCP	PLR		M	R	-	-	3	4	5	-	7	-	9	-	SALEABLE		34951-2011	34951-2021	34951-1631	34951-1641
								11	12	13	-	15	-	17	-	19	20						
MX150 ASSY RCP 2X10 CS CPA BK A/12	334722721	A-BLACK-CLIP	GCP	PLR	CPA	M	R	-	-	-	-	-	-	7	8	-	-	SALEABLE		34951-2011	34951-2021	34951-1631	34951-1641
								-	12	13	14	15	16	17	-	-	-						
MX150 ASSY RCP 2X10 CPA BK A/12	334722722	A-BLACK	GCP	PLR	CPA	M	R	-	-	-	-	-	-	7	8	-	-	SALEABLE		N/A	N/A	N/A	N/A
								-	12	13	14	15	16	17	-	-	-						
MX150 ASSY RCP 2X10 BK A/8	334722723	A-BLACK	GCP	PLR		M	R	-	-	3	4	5	-	7	-	9	-	SALEABLE		N/A	N/A	N/A	N/A
								11	12	13	-	15	-	17	-	19	20						
MX150 ASSY RCP 2X10 CPA BK A/15	334722724	A-BLACK	GCP	PLR	CPA	M	R	-	-	3	4	-	-	-	-	-	-	SALEABLE		N/A	N/A	N/A	N/A
								-	-	13	14	-	-	-	-	-	20						