Jun.1.2024 Copyright 2024 HIROSE ELECTRIC CO., LTD. All Rights Reserved.
In case of consideration for using Automotive equipment / device which demand high reliability, kindly contact our sales window correspondents.

	COUNT	DESCRIPTION OF REVISIONS	BY	CHKD	DATE		COUNT	DESCRIPTION OF REVISIONS	BY	CHKD	DATE
△					. .	△					. .
△					. .	△					. .
△					. .	△					. .

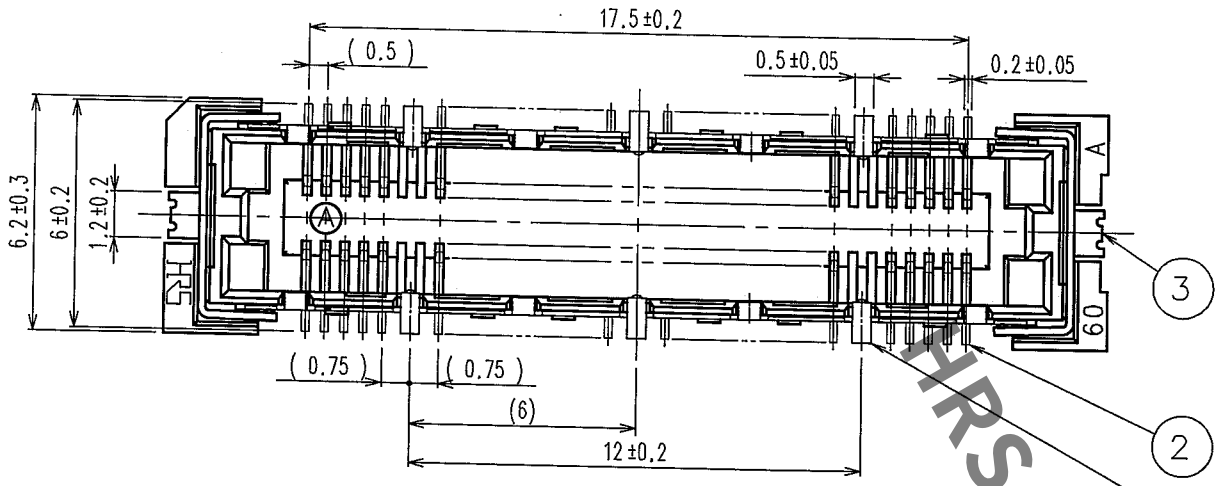

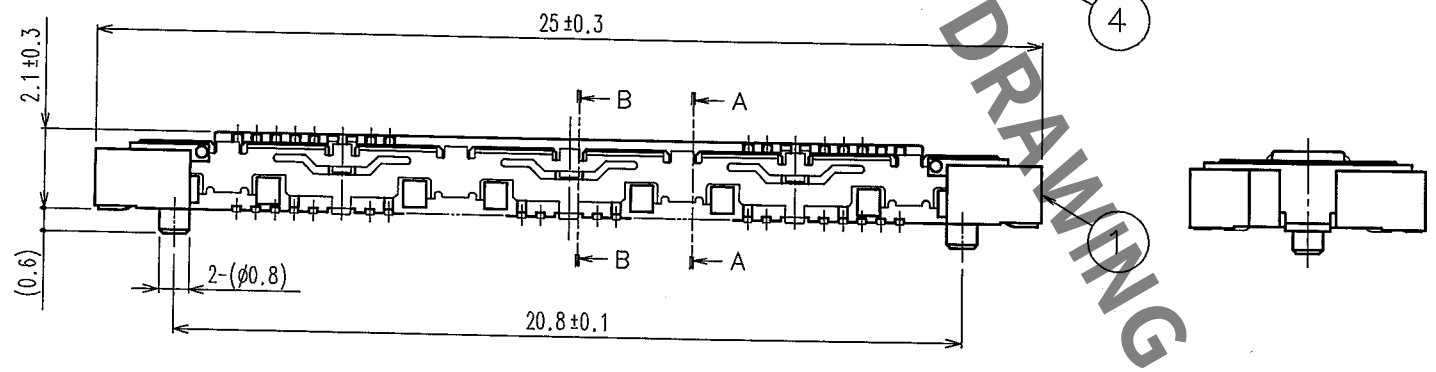

A-A(10:1)

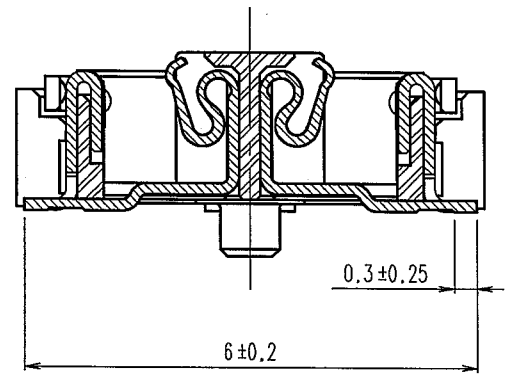

B-B(10:1)

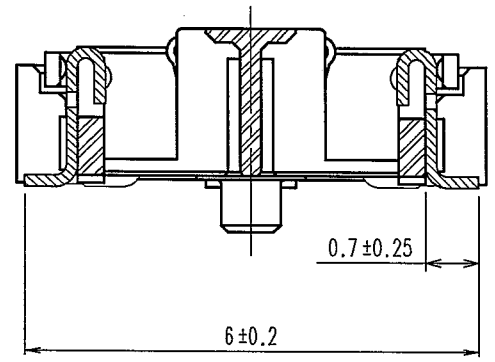

RECOMMENDED LAND PATTERN DIMENSION OF PCB

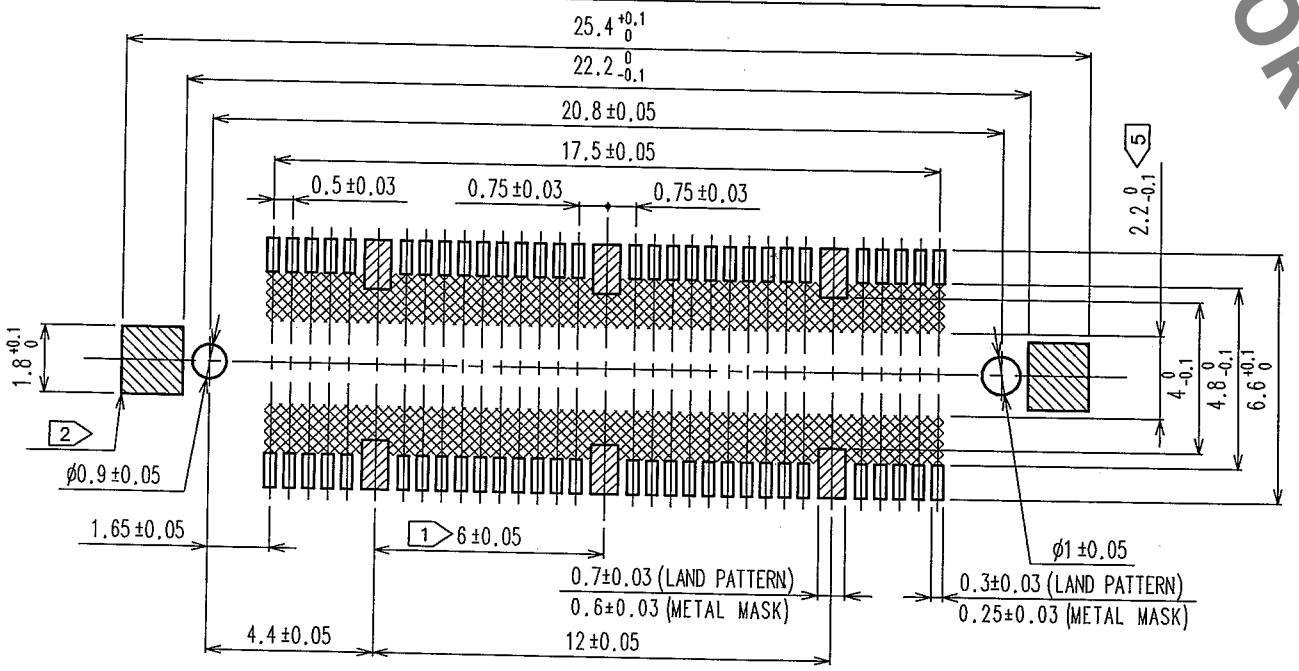

NOTES
1. 6 HATCHED PARTS:GROUND CIRUIT.
2. 2 HATCHED PARTS:GROUND CIRUIT.
3. SMT LEAD-COPLANARITY:0.1 MAX.
4. THIS PRODUCT HAS NO POLARITY TO PATTERN FOR MOUNTING.
5. MAKE SURE WIDTH OF PATTERN IS WITHIN THAT OF LAND ,OR LEAD MAY TOUCH PATTERN.(THIS APPLIES TO HATCHED AREA.)
6. DIMENSION IN PARENTHESES ARE FOR REFERENCE.

HRS DRAWING FOR REFERENCE

NO.	MATERIAL	FINISH, REMARKS	NO.	MATERIAL	FINISH, REMARKS
3,4	PHOSPHOR BRONZE	TIN PLATING	2	PHOSPHOR BRONZE	CONTACT AREA : GOLD 0.1μm min.
1	LCP	BEIGE UL94V-0			MOUNTING AREA : GOLD FLASH
					UNDER PLATING : NICKEL 1.0μm min.

CODE NO.(OLD)	DRAWN	DESIGNED	CHECKED	APPROVED	RELEASED
CL	T.YANAGISAWA '05.10.12	T.Noda '05.10.13	H.Ozawa '05.10.13	H.Ozawa '05.10.13	

SCALE 5 : 1	DRAWING NO. EDC3-152632-25	PART NO. FX11A-60S/6-SV(71)
UNITS mm	HRS HIROSE ELECTRIC CO.,LTD.	CODE NO. CL573-0702-9-71 1/1

FORM NO.229

TO