SAMZO | REAC/ROHS

REV	ECN NO	DESRIPTION	DESIGN	APPROVAL	DATE
A1	NEW	Replace frame			2018.06.12

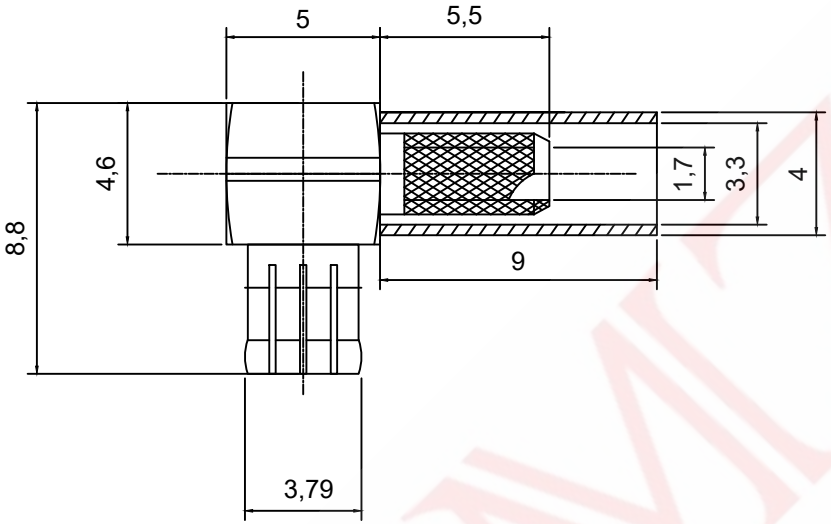

Technical Requirements
1.Frequency: 0 - 3GHz
2.VSWR: ≤1.3
3.Rated voltage: 170V
4.Withstand voltage: 500V
5.Insulation resistance: ≥1000MΩ
6.Contact resistance: Inner conductor ≤5mΩ;
Outer conductor ≤2.5mΩ
7.Dimensions without tolerance indication shall be subject to ±0.2

MCX JW 105 T0 0

- Surface treatment镀层:镀金
- Way方式:T-90° 接口
- Length体长:10.5mm
- Product number编号:JW-1.5
- Product series系列:MCX同轴射频天线座

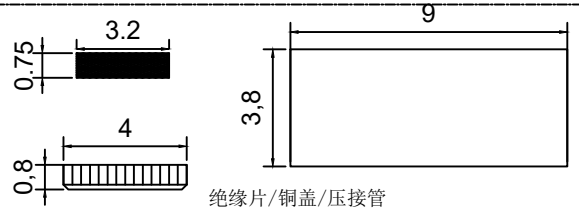

绝缘片/铜盖/压接管

配件图示

ITEM	DESCRIPTION	MATERIAL	QTY	FINSH/COLOR					
C	插孔	HPB59-1	1	------				GENERAL TOLERANCE	
B	绝缘体	聚四氟乙烯	1	------				⩾0~2<	±0.15
A	主体	黄铜	1	镀金	DESIGN	WANGGUIFA	2018.06.12	⩾2~5<	±0.25
					CHECKED	ZHENGUILAN	2018.06.12	⩾0~2<	±0.15
					APPROVED	LILIANJIANG	2018.06.14	⩾5	±0.35

FIRST VIEW

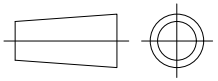

SCALE 1:1 UNIT mm

SAMZO COMPONENTS
Electronic switch and connector manufacturer

The copyright belongs to samzo parts [China] Co., Ltd. please use the material after samzo parts agree to authorize. The final right of interpretation belongs to samzo parts.
WWW.KKK-JP.COM

TITLE:: MCX-JW-1.5弯插 L=10.5MM
DWG NO: MCXJW105-P003
PART NO: MCXJW-230710
MODEL NO: MCX-JW-105-T0-0
NAME: MCX COAXIAL RF CONNECTOR