THIS DRAWING IS UNPUBLISHED. RELEASED FOR PUBLICATION 20
© COPYRIGHT 20 BY - ALL RIGHTS RESERVED.

REVISIONS

P	LTR	DESCRIPTION	DATE	DWN	APVD
	A	INITIAL	03JUN2015	DW	CW

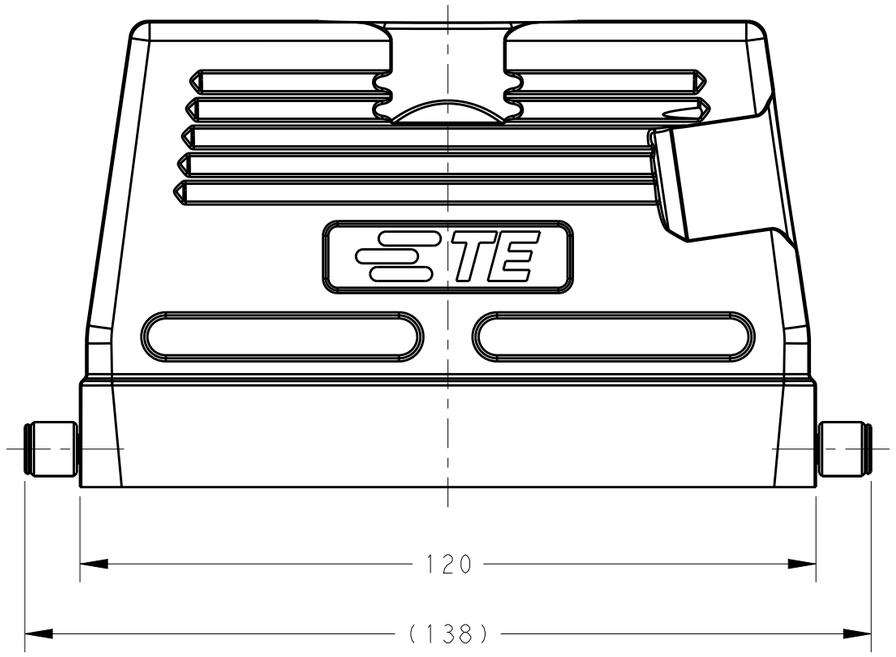

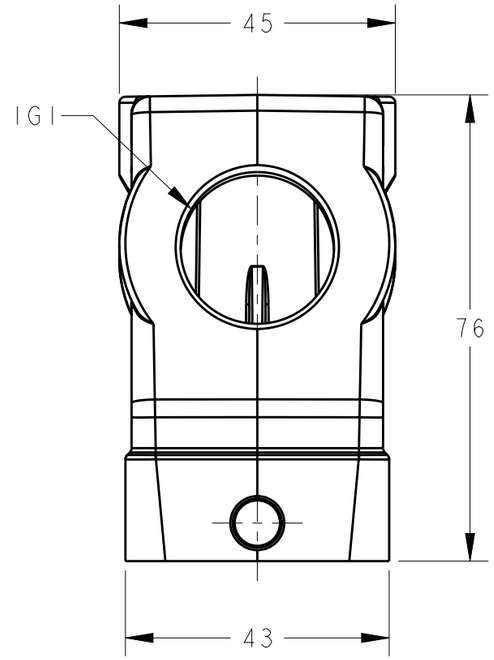

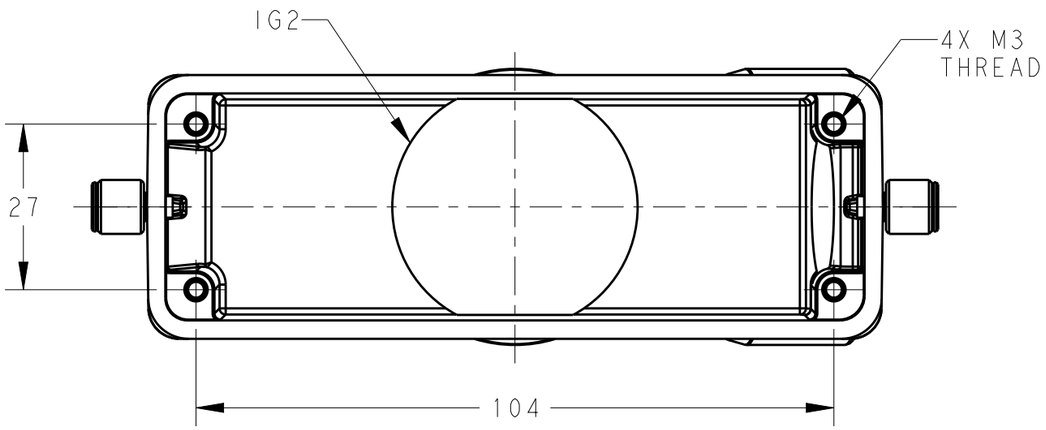

NOTES:
1. TECHNICAL CHARACTERISTICS:
   HOOD MATERIAL: DIE CAST ALUMINIUM ALLOY
   SURFACE: POWDER COATED, GREY
   OPERATION TEMPERATURE: -40-+125°C
   DEGREE OF PROTECTION: IP65 (MATED)

注释:
1. 技术参数:
   上壳材料: 铝合金
   表面处理: 粉末涂层,灰色
   工作温度: -40-+125°C
   防护等级: IP65(配合)

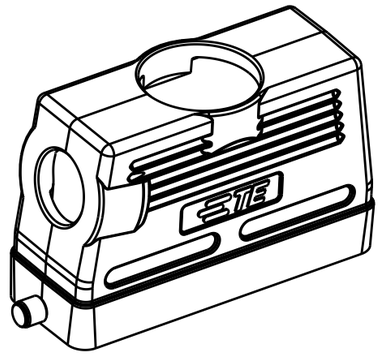

SCALE 1:2

PART NUMBER	DESCRIPTION	IG1	IG2
T1180242540-000	H24B-TGH/TSH-RO-M40/M25	M25	M40

THIS DRAWING IS A CONTROLLED DOCUMENT.

DIMENSIONS: mm

TOLERANCES UNLESS OTHERWISE SPECIFIED:
0 PLC ±-
1 PLC ±-
2 PLC ±-
3 PLC ±-
4 PLC ±-
ANGLES ±-

MATERIAL - -
FINISH - -

DWN 04JUN2015 David Wang
CHK 04JUN2015 Chris Wang
APVD 04JUN2015 Xiang Xu
PRODUCT SPEC 108-137013
APPLICATION SPEC 114-137013
WEIGHT -

TE Connectivity

NAME H24B-TGH/TSH-RO-M40/M25

SIZE	CAGE CODE	DRAWING NO	RESTRICTED TO
A3	00779	C-T1180242540000	-

Customer Drawing

SCALE 1:1 SHEET 1 OF 1 REV A