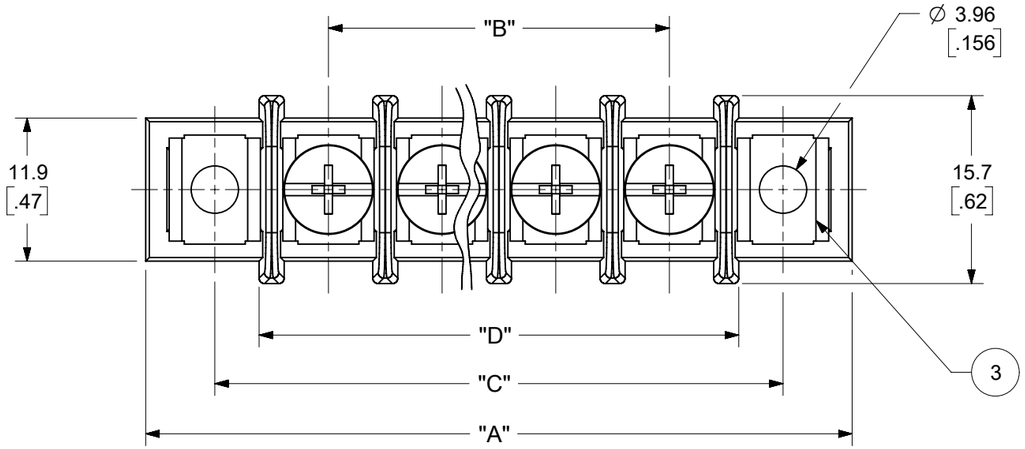

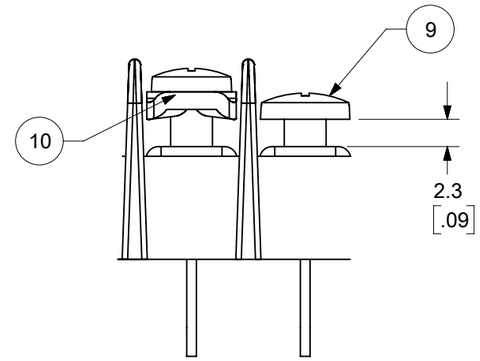

WIRE READY SPEC. (OPTION -47)
(FOR OPTIONAL SCREW -50
AND STANDARD SCREW.)

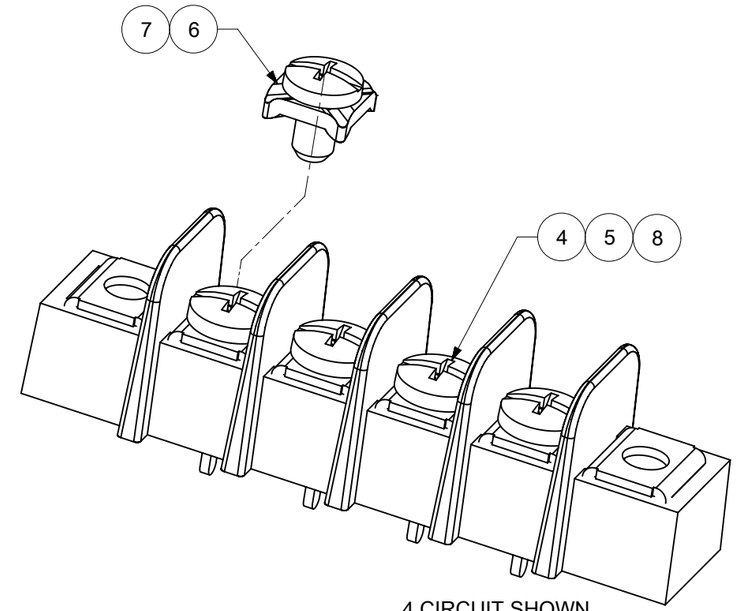

4 CIRCUIT SHOWN

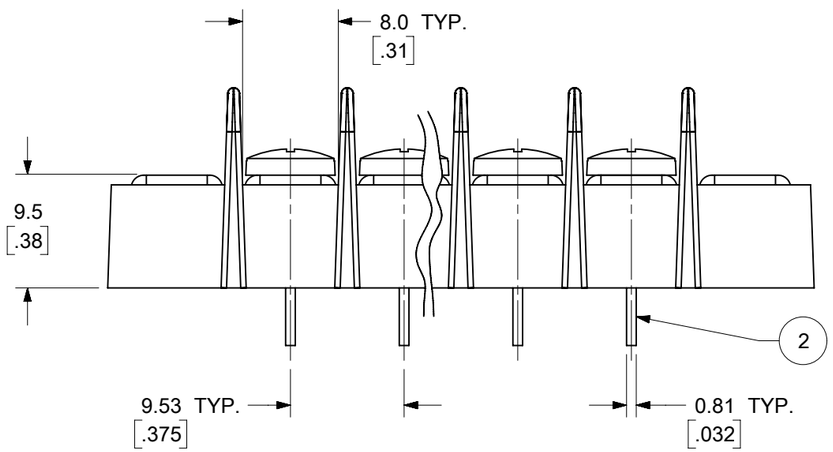

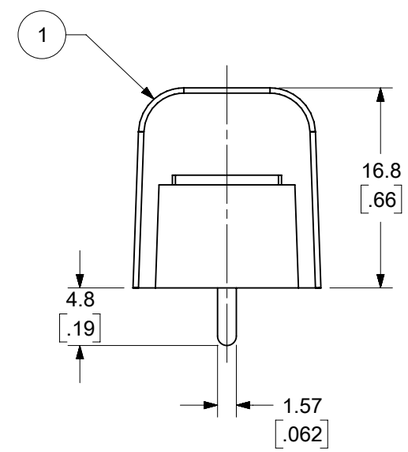

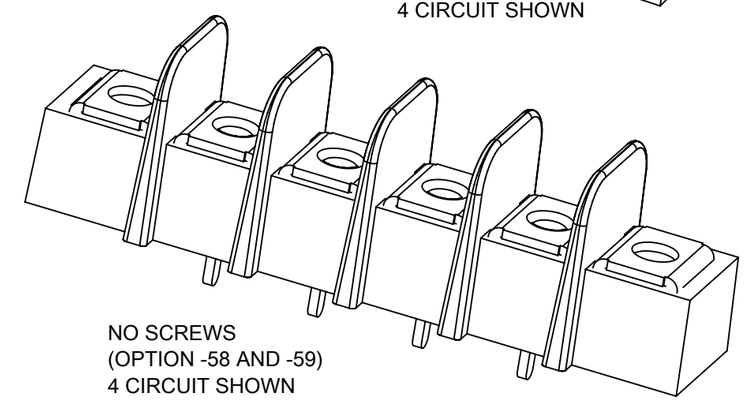

NO SCREWS
(OPTION -58 AND -59)
4 CIRCUIT SHOWN

ITEM	QTY.	DESCRIPTION	MATERIAL	FINISH
10	XX	#6-32 WRDY W/WASH SCR (OPT -47,-50)	STEEL	ZN, CLEAR CHROMATE
9	XX	#6-32 PH/SLOT WRDY SCR (OPT -47)	STEEL	ZN, CLEAR CHROMATE
8	XX	#6-32 BHD, PHIL-SLOT SST SCR (OPT -56)	STAINLESS STEEL	PASSIVATE
7	XX	#6-32 PH/SL W/WASH SCR (OPT -49,-50)	BRASS	NICKEL
6	XX	#6-32 PH/SL W/WASH SCR (OPT -50)	STEEL	ZN, CLEAR CHROMATE
5	XX	#6-32 PH/SLOTTED SCREW (OPT -49)	BRASS	NICKEL
4	XX	#6-32 PH/SLOTTED SCREW (STD)	STEEL	ZN, CLEAR CHROMATE
3	2	MOUNTING PLATE	BRASS	NICKEL
2	XX	TERMINAL, PC	BRASS	BRT. TIN/CU
1	1	INSULATOR, SINGLE ROW	PBT	BLACK

DOCUMENT STATUS	P1	RELEASE DATE	2024/08/13 06:11:34

NOTES:
1. MATERIAL: SEE TABLE
2. FINISHES: SEE TABLE
3. INCH DIMENSIONS ARE IN BRACKETS [XXX].
4. REFER TO SD-38120-001 FOR IMPRINTING OPTIONS 10A AND 11A.
5. REFER TO SD-38120-007 FOR IMPRINTING OPTION 12A.
6. "XX" REFERS TO THE QUANTITY OF CIRCUITS.
7. ALL COMPONENTS ARE ROHS COMPLIANT.

TOLERANCES			
MM	TOL	INCH	TOL
0-6	±0.25	0-.24	±.010
>6-30	±0.40	.24-1.18	±.016
>30-120	±0.50	1.18-4.76	±.020
>120	±0.80	>4.76	±.031

THIS DRAWING CONTAINS INFORMATION THAT IS PROPRIETARY TO MOLEX ELECTRONIC TECHNOLOGIES, LLC AND SHOULD NOT BE USED WITHOUT WRITTEN PERMISSION

DIMENSION UNITS	SCALE
mm/INCH	2:1

GENERAL TOLERANCES (UNLESS SPECIFIED)

	MM	INCH
4 PLACES	±	±
3 PLACES	±	± SEE CHART
2 PLACES	± SEE CHART	± SEE CHART
1 PLACE	± SEE CHART	±
0 PLACES	±	±
ANGULAR TOL	± °	

DRAFT WHERE APPLICABLE MUST REMAIN WITHIN DIMENSIONS

CURRENT REV DESC: REMOVED OBSOLETED PART NUMBERS AS PER PCN#515181.

EC NO: 793827
DRWN: RAVINR1 2024/05/30
CHK'D: GGA 2024/08/13
APPR: GGA 2024/08/13
INITIAL REVISION:
DRWN: CLYORK 2006/10/19
APPR: JMACNEIL 2006/10/20

THIRD ANGLE PROJECTION

molex

9.53MM [.375"] SR BTS,
PC ASSY

PRODUCT CUSTOMER DRAWING

DOCUMENT NUMBER	DOC TYPE	DOC PART	REVISION
SD-38720-001	PSD	001	E3

DRAWING	SERIES	MATERIAL NUMBER	CUSTOMER	SHEET NUMBER
B-SIZE	38720	SEE CHART	GENERAL MARKET	1 OF 2

NUMBER OF CIRCUITS "XX"	MATERIAL NO. (OPT -50)	MATERIAL NO. (OPT -49,-50)	MATERIAL NO. (OPT -49)	MATERIAL NO. (STD)	NUMBER OF CIRCUITS "XX"
02	387207402	---	---	387206202	02
03	387207403	---	---	387206203	03
04	387207404	387291159	387206804	387206204	04
05	387207405	---	---	387206205	05
06	387207406	---	---	387206206	06
07	---	---	---	387206207	07
08	387207408	---	387206808	387206208	08
10	---	---	---	387206210	10
12	---	---	387206812	387206212	12
13	---	---	---	387206213	13
14	---	---	---	387206214	14
15	---	---	---	387206215	15
16	---	---	---	387206216	16
18	---	---	---	387206218	18
20	---	---	---	387206220	20

NUMBER OF CIRCUITS "XX"	DIM. "A"		DIM. "B"		DIM. "C"		DIM. "D"	
01	30.7	[1.21]	--	--	19.1	[.75]	11.6	[.46]
02	40.1	[1.58]	9.53	[.375]	28.6	[1.13]	21.1	[.83]
03	49.7	[1.96]	19.05	[.750]	38.1	[1.50]	30.6	[1.21]
04	59.2	[2.33]	28.58	[1.125]	47.6	[1.88]	40.1	[1.58]
05	68.7	[2.71]	38.10	[1.500]	57.2	[2.25]	49.7	[1.96]
06	78.2	[3.08]	47.63	[1.875]	66.7	[2.63]	59.2	[2.33]
07	87.8	[3.46]	57.15	[2.250]	76.2	[3.00]	68.7	[2.71]
08	97.3	[3.83]	66.68	[2.625]	85.7	[3.38]	78.2	[3.08]
09	106.8	[4.21]	76.20	[3.000]	95.3	[3.75]	87.8	[3.46]
10	116.3	[4.58]	85.73	[3.375]	104.8	[4.13]	97.3	[3.83]
11	125.9	[4.96]	95.25	[3.750]	114.3	[4.50]	106.8	[4.21]
12	135.4	[5.33]	104.78	[4.125]	123.8	[4.88]	116.3	[4.58]
13	144.9	[5.71]	114.30	[4.500]	133.4	[5.25]	125.9	[4.96]
14	154.4	[6.08]	123.83	[4.875]	142.9	[5.63]	135.4	[5.33]
15	164.0	[6.46]	133.35	[5.250]	152.4	[6.00]	144.9	[5.71]
16	173.5	[6.83]	142.88	[5.625]	161.9	[6.38]	154.4	[6.08]
17	183.0	[7.21]	152.40	[6.000]	171.5	[6.75]	164.0	[6.46]
18	192.5	[7.58]	161.93	[6.375]	181.0	[7.13]	173.5	[6.83]
19	202.1	[7.96]	171.45	[6.750]	190.5	[7.50]	183.0	[7.21]
20	211.6	[8.33]	180.98	[7.125]	200.0	[7.88]	192.5	[7.58]
21	221.1	[8.71]	190.50	[7.500]	209.6	[8.25]	202.1	[7.96]
22	230.6	[9.08]	200.03	[7.875]	219.1	[8.63]	211.6	[8.33]
23	240.2	[9.46]	209.55	[8.250]	228.6	[9.00]	221.1	[8.71]
24	249.7	[9.83]	219.08	[8.625]	238.1	[9.38]	230.6	[9.08]
25	259.2	[10.21]	228.60	[9.000]	247.7	[9.75]	240.2	[9.46]
26	268.7	[10.58]	238.13	[9.375]	257.2	[10.13]	249.7	[9.83]

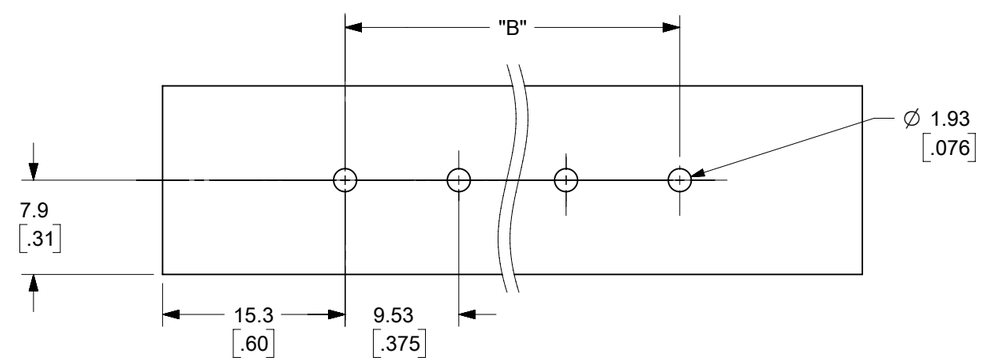

PTH PATTERN

TOLERANCES			
MM	TOL	INCH	TOL
0-6	±0.25	0-.24	±.010
>6-30	±0.40	.24-1.18	±.016
>30-120	±0.50	1.18-4.76	±.020
>120	±0.80	>4.76	±.031

THIS DRAWING CONTAINS INFORMATION THAT IS PROPRIETARY TO MOLEX ELECTRONIC TECHNOLOGIES, LLC AND SHOULD NOT BE USED WITHOUT WRITTEN PERMISSION

DIMENSION UNITS: mm/INCH
SCALE: 2:1

GENERAL TOLERANCES (UNLESS SPECIFIED)

	MM	INCH
4 PLACES	±	±
3 PLACES	±	± SEE CHART
2 PLACES	± SEE CHART	± SEE CHART
1 PLACE	± SEE CHART	±
0 PLACES	±	±
ANGULAR TOL	± °	

DRAFT WHERE APPLICABLE MUST REMAIN WITHIN DIMENSIONS

CURRENT REV DESC: REMOVED OBSOLETED PART NUMBERS AS PER PCN#515181.

EC NO: 793827
DRWN: RAVINR1 2024/05/30
CHK'D: GGA 2024/08/13
APPR: GGA 2024/08/13
INITIAL REVISION:
DRWN: CLYORK 2006/10/19
APPR: JMACNEIL 2006/10/20

THIRD ANGLE PROJECTION | DRAWING: B-SIZE | SERIES: 38720

molex

9.53MM [.375"] SR BTS, PC ASSY

PRODUCT CUSTOMER DRAWING

DOCUMENT NUMBER	DOC TYPE	DOC PART	REVISION
SD-38720-001	PSD	001	E3

MATERIAL NUMBER	CUSTOMER	SHEET NUMBER
SEE CHART	GENERAL MARKET	2 OF 2

DOCUMENT STATUS	P1	RELEASE DATE	2024/08/13 06:11:34

FORMAT: Eng-lega-master-tb-prod-B
REVISION: E1
DATE: 2021/05/01