REVISIONS					
REV.	ECN NO.	LOCATION	DESCRIPTION	DATE	DESIGN
A0	N/A		INITIAL RELEASE	/	/
A1	N/A	A1 X1	产品尺寸变更，图面升级整理图面	2025.05.06	阿树

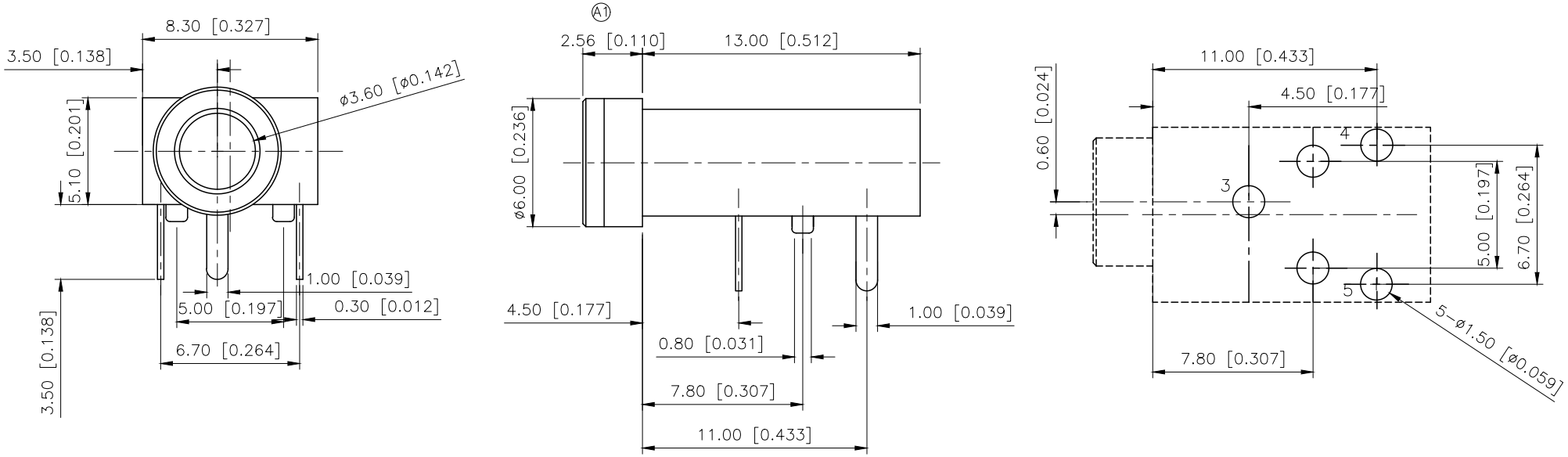

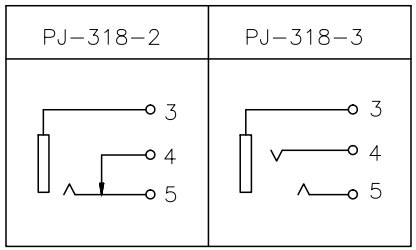

	MATERIAL	PLATING
terminal 3	Phosphor Bronze	tin
terminal 4	Phosphor Bronze	tin
terminal 5	Phosphor Bronze	tin
plastic	Pbt	

1.Rating: DC 30V 0.5A;
2.Contct resistance: ≤0.03Ω;
3.Insulation resistance: ≥100mω(dc250v)
4.Withstand voltage: 500vac;
5.Insertion and extraction force: 3−30n;
6.Life test: 5,000 cycles

AuGLAR	±5°
X.	±0.40
X.x	±0.30
X.xx	±0.20
X.xxx	±0.15
UNSPECIFIED TOLERAuCES	

XKB Connection 星创

DESIGN	阿树	VIEW:	MODEL TYPE: 3.5 PHONE JACK
CHECKED		UNIT: mm/in	PART NO.: PJ−318−X
APPROVED		SIZE: A4	DWG NO.:

XKB INDUSTRIAL PRECISION CO.,LIMITED

SCALE	PAGE	REVISION
N/A	1/1	A1

www.helloxkb.com www.helloxkb.cn www.xk−dg.cn