Copyright FCI.

FCIconnect.com

PRODUCT NUMBER	PITCH
TSxx51xB00J0G	5.08 mm

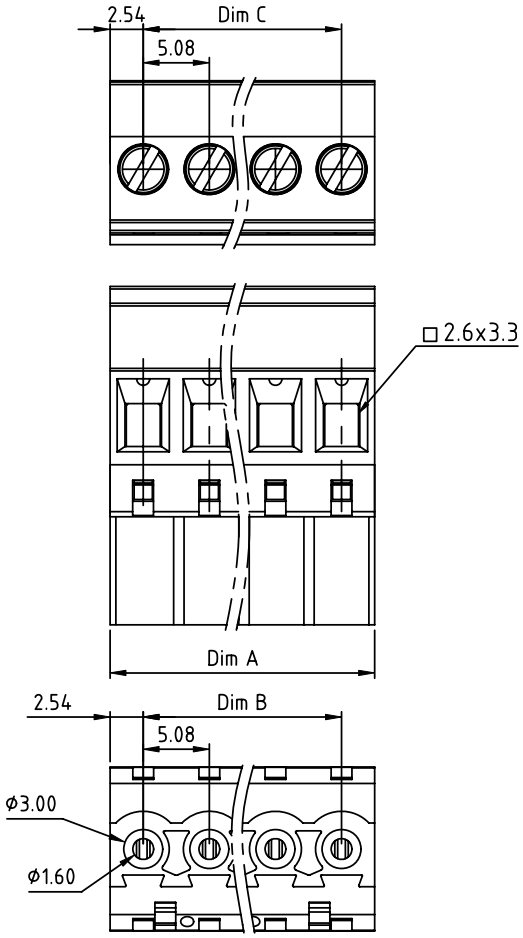

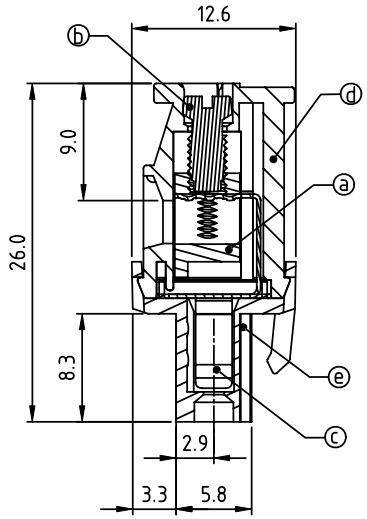

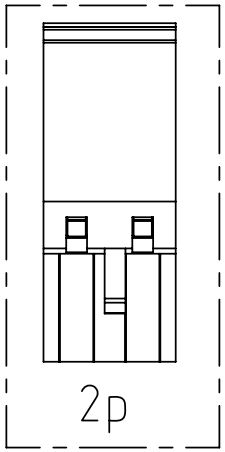

Material

- Item ⓐ Clamp: Brass(CuZn), Ni plating
- Item ⓑ Terminal screw: Steel Zinc plating "-" slot type
- Item ⓒ Female contact: PhBz,Tin plated
- Item ⓓ Top body: Thermoplastic (UL94V-0)
- Item ⓔ Bottom body: Thermoplastic (UL94V-0)

Electrical cULus/VDE/TUV

- Voltage rating: 300VAC/300VAC/300VAC
- Current rating: 15A/17A/15A
- Wire range: 2.5mm²/0.34-2.5mm²
- Solid wire(AWG): 12-24
- Stranded wire(AWG): 12-24
- Torque: 3.5Lb-In./0.5Nm/0.4Nm
- Screw: M3
- Wire strip length: 6-7mm
- Withstanding Voltage: 1.6KV/2.5KV/2.5KV
- Operating temperature: -40°C to +115°C
- Safety approval: cULus VDE TÜV

N = Number of poles
Dim A=Nx5.08
Dim B=(N-1)x5.08
Dim C=(N-1)x5.08

poles	Tolerance
2-6p	±0.15
7-12p	±0.25
13-18p	±0.30
19-24p	±0.40

PART NO.: TS xx 51 x B 00J0 G

Solid block
No. of poles
02 2 poles
03 3 poles
... ...
24 24 poles

Color
0 Black (RAL9005)
2 Red (RAL3001/D)
3 Orange(RAL2011/P)
4 Yellow(RAL1018/A)
5 Green(RAL6018/T)
6 Blue (RAL5015/A)
8 Grey(RAL7035/D)
9 White(RAL1102)
C Green(RAL6018/U)

RoHS compliant
(lead<4%)
In copper Alloy

mat'l. code				surface ASME Y14.5	tolerance ASME Y14.5	projection	product family TERMINAL BLOCK
ltr	ecn no	dr	date	tolerances unless otherwise specified			title
				angles	linear X.±0.5 / X.X±0.3 / X.XX±0.1	MM	TERMINAL BLOCK
				X°±1°		scale	PLUGGABLE PLUG,HOOK ON BACK SIDE,WITHOUT FLANGE
				dr	EVIN ZHONG 041914	FCI	dwg no TSxx51xB00J0G sheet 1 of 1 size A4
				engr	EVIN ZHONG 041914		
				chr	HANKE FENG 041914		
				appd	SHI JUN 041914		type CUSTOMER Drawing
sheet index	revision	A					
	sheet	1					

form: A4mmXLc

Downloaded from Arrow.com.