Downloaded from Arrow.com.

SH NO.	M CODE	MADE FROM

GSD

1075-1

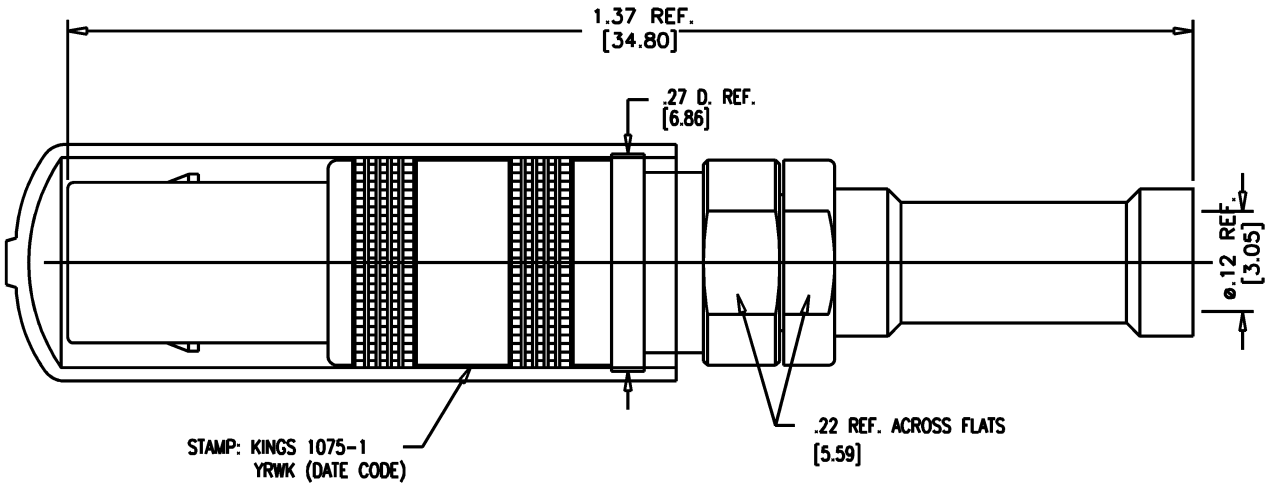

NOTES:
1. FOR USE WITH M17/119-RG174, M17/094-RG179 & M17/113-RG316 CABLE.
2. FOR CABLING INSTRUCTIONS SEE CP-459.
3. FOR CRIMPING USE DIE KTH-2082.
4. CONTACT MAY BE CRIMPED ON M17/119-RG174 & M17/113-RG316 CABLES, BUT MUST BE SOLDERED ON BALANCE OF CABLE GROUP.
5. MATERIALS:
   INSULATORS: TEFLON, ASTM-D4894
   K-GRIP SLEEVE: COM. BRONZE, ASTM-B140
   K-LOC BODY: BER. COPPER, ASTM-B-196
   ALL OTHER METAL PARTS: BRASS, ASTM-B16
6. FINISHES:
   CENTER CONTACT: HARD GOLD PLATE, PER ASTM-B488
   ALL OTHER METAL PARTS: NICKEL
7. ELECTRICAL CHARACTERISTICS:
   NOMINAL IMPEDANCE: 50 OHMS
   WORKING VOLTAGE: 500 VRMS
8. DIMENSIONS IN INCHES [MM].

GSD

REVISIONS

ISSUE	CHANGES
10	CN 39452 E DCT 5/4/6
11	CN 39620 A DCT 9/13/6

SCALE 6:1

APPROX SURFACE AREA

USED ON

REF:

PLUG, K-LOC

DRAWN	DCT	DATE	4/26/6
DESIGN	MJB	DATE	04/22/91
APPR.		DATE	

KINGS
ELECTRONICS CO., INC.
ROCK HILL, SOUTH CAROLINA 29730

1075-1

MAY 2007 THIS DRAWING BECAME THE PROPERTY OF PROPERTY OF
WINCHESTER ELECTRONICS CORPORATION, WALLINGFORD, CT 06492