PRODUCT NUMBER
10087121–7XXLF

PLATING
0.05µm Au FULL PLATED
OVER 1.27µm Ni MIN

INDICATES THE PRODUCT IS RoHS COMPATIBLE, SEE NOTE 5

PIN STYLE	SIZE
06	2x3
08	2x4
10	2x5
14	2x7
16	2x8
18	2x9
20	2x10
26	2x13
30	2x15
34	2x17
40	2x20
44	2x22
50	2x25
60	2x30
64	2x32

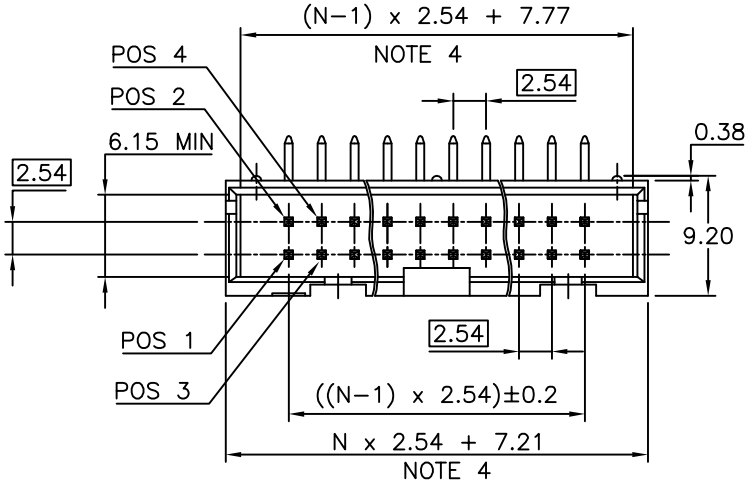

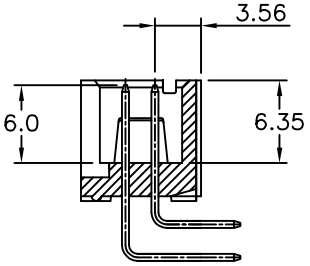

SECTION A–A

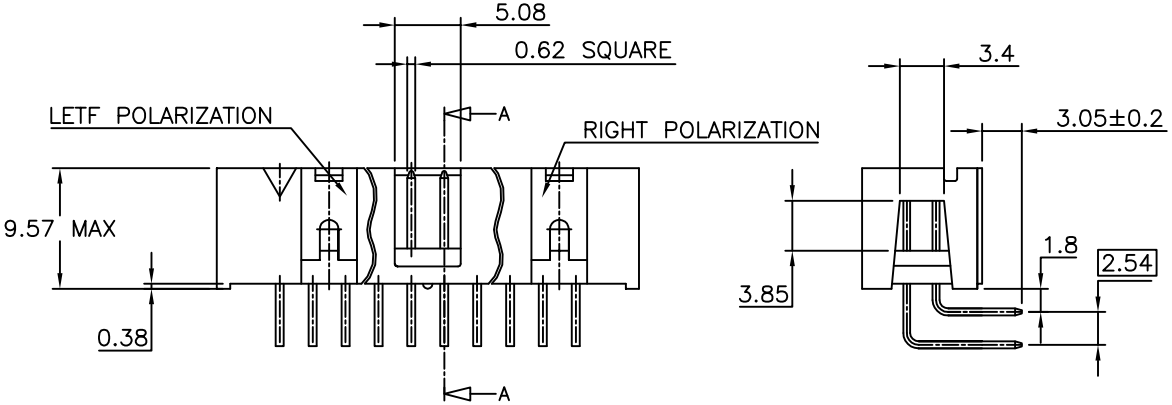

NOTES:

1 – HOUSING MAT'L : GLASS FILLED THERMOPLASTIC. UL94V–0 COLOR: BLUE

2 – PIN MATERIAL : BRASS

3 – PRODUCT PACKAGED IN TUBES.

4 – TO DETERMINE DIMENSIONS :
N = NUMBER OF POSITIONS PER ROW
EXAMPLE : 8 POS N x 2.54 = 20.32mm

5 – RoHS COMPATIBLE PRODUCT SPECIFICATIONS

a – PLATING:
– "LF" MEANS THE PRODUCT IS LEAD–FREE, 2µm MINIMUM MATTE TIN OVER 1.27µm MINIMUM NICKEL UNDERPLATE.

b – MANUFACTURING PROCESS COMPATIBILITY
– THE HOUSING WILL WITHSTAND EXPOSURE TO 260°C ±5°C SOLDER BATH TEMPERATURE FOR 5 SECONDS IN A WAVE SOLDER APPLICATION WITH A 1.6mm MIN THICK CIRCUIT BOARD.

c – LABELLING:
– MEETS PACKAGING SPECS AS PER GS–14–920

d – LEGAL STATEMENT: SEE GS–47–0004

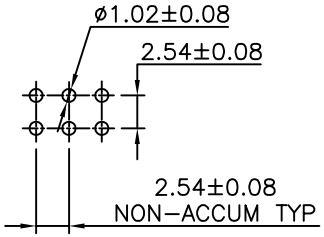

RECOMMENDED HOLE PATTERN

ltr	ecn no	dr	date
A	F08–0149	LMU	08.03.27
B	B–19070	LMU	14.10.15
C	B–19564	BVE	14.12.01

mat'l. code
surface ISO 1302
tolerance ISO 406 ISO 1101
tolerances unless otherwise specified
angles
linear .X ±0.3 .XX ±0.13 .XXX ±0.05
projection
mm
scale 2.5:1
dr J.COMPAGNON 08.03.07
engr L.MULIN 08.03.07
chr
appd L.MULIN 08.03.07
product family QUICKIE
title QKIE SSLIM HDR RA 0.05µm AU
dwg no 10087121
sheet 1 of 1
size A3
type CUSTOMER Drawing
sheet index
revision sheet

form: A3

FCIconnect.com
Copyright FCI
Downloaded from Arrow.com.