Jun.1.2024 Copyright 2024 HIROSE ELECTRIC CO., LTD. All Rights Reserved.
In case of consideration for using Automotive equipment / device which demand high reliability, kindly contact our sales window correspondents.

	COUNT	DESCRIPTION OF REVISIONS	BY	CHKD	DATE		COUNT	DESCRIPTION OF REVISIONS	BY	CHKD	DATE
△					. .	△					. .
△					. .	△					. .
△					. .	△					. .

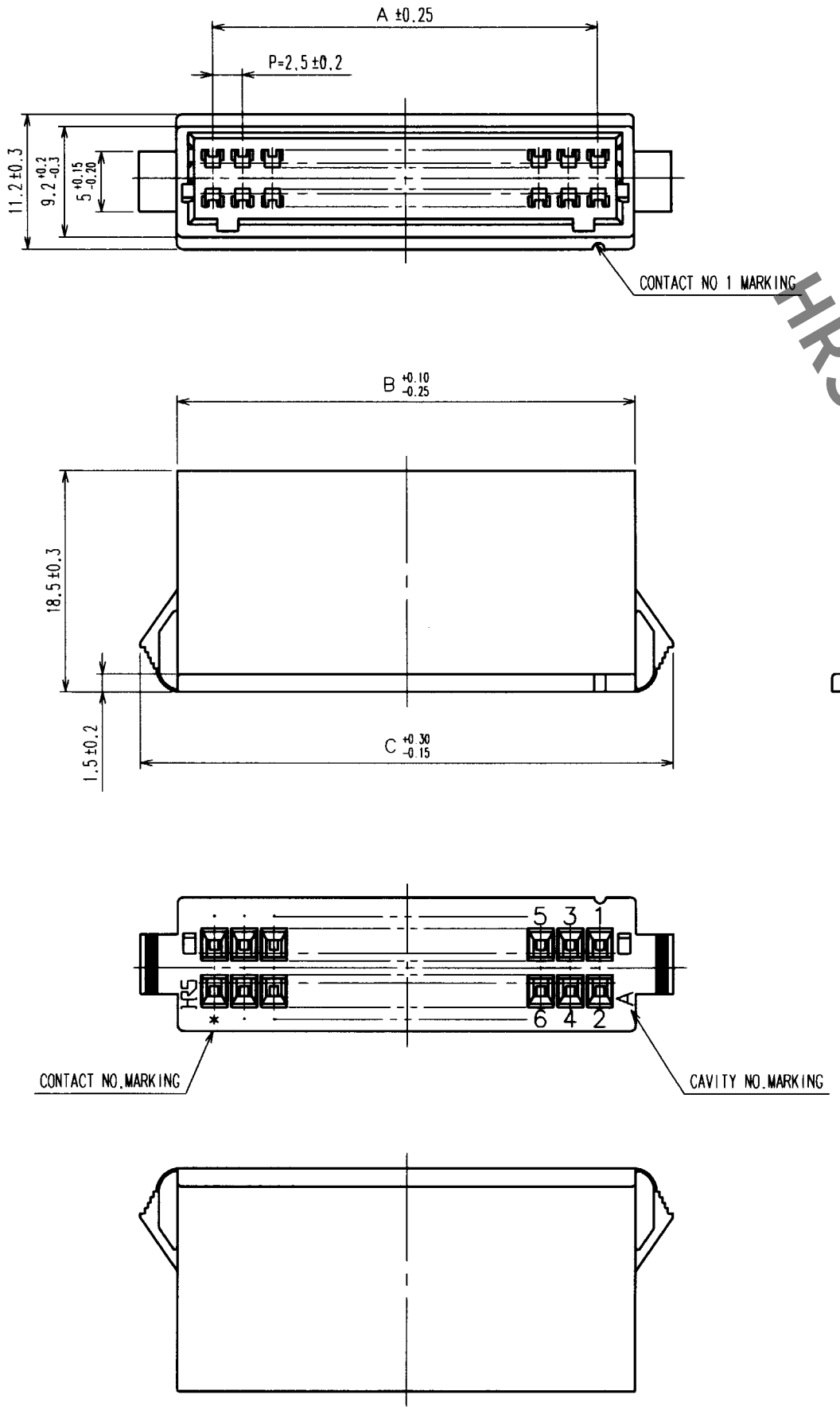

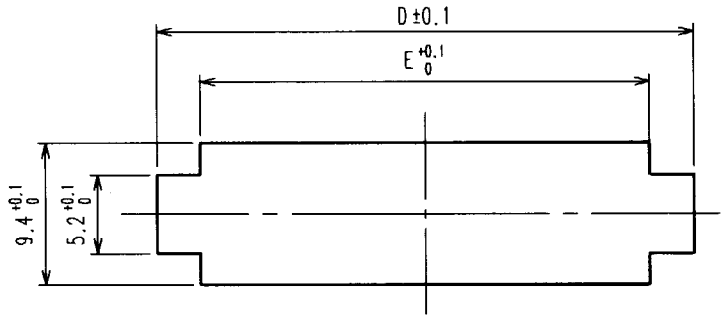

NOTE:WHEN YOU MOUNT DF1BA RELAY SOCKET ON A PANEL,PLEASE TAKE NOTE OF DIMENSIONS D, INDICATED IN THE TABLE ABOVE.BICAUSE THE CUT-OUT DIMENSION DEPENDS ON PANEL THICKNESS.
THE PANEL CUT OUT SHALL BE FREE FROM BURR.

					PANEL CUT-OUT			
					PANEL THICKNESS			
					0.5~1.2	1.3~1.6	1.7~2.0	
製品コード	製 品 名	A	B	C	D	D	D	E
CL541-0719-7	DF1BA- 4DEP-2.5RC	2.5	8.6	15.0	12.7	13.4	14.1	8.8
CL541-0720-6	DF1BA- 6DEP-2.5RC	5.0	11.1	17.5	15.2	15.9	16.6	11.3
CL541-0721-9	DF1BA- 8DEP-2.5RC	7.5	13.6	20.0	17.7	18.4	19.1	13.8
CL541-0722-1	DF1BA-10DEP-2.5RC	10.0	16.1	22.5	20.2	20.9	21.6	16.3
CL541-0723-4	DF1BA-12DEP-2.5RC	12.5	18.6	25.0	22.7	23.4	24.1	18.8
CL541-0724-7	DF1BA-14DEP-2.5RC	15.0	21.1	27.5	25.2	25.9	26.6	21.3
CL541-0725-0	DF1BA-16DEP-2.5RC	17.5	23.6	30.0	27.7	28.4	29.1	23.8
CL541-0726-2	DF1BA-18DEP-2.5RC	20.0	26.1	32.5	30.2	30.9	31.6	26.3
CL541-0727-5	DF1BA-20DEP-2.5RC	22.5	28.6	35.0	32.7	33.4	34.1	28.8
CL541-0728-8	DF1BA-22DEP-2.5RC	25.0	31.1	37.5	35.2	35.9	36.6	31.3
CL541-0729-0	DF1BA-24DEP-2.5RC	27.5	33.6	40.0	37.7	38.4	39.1	33.8
CL541-0730-0	DF1BA-26DEP-2.5RC	30.0	36.1	42.5	40.2	40.9	41.6	36.3
CL541-0731-2	DF1BA-28DEP-2.5RC	32.5	38.6	45.0	42.7	43.4	44.1	38.8
CL541-0732-5	DF1BA-30DEP-2.5RC	35.0	41.1	47.5	45.2	45.9	46.6	41.3
CL541-0734-0	DF1BA-34DEP-2.5RC	40.0	46.1	52.5	50.2	50.9	51.6	46.3

NO.	MATERIAL	FINISH, REMARKS	NO.	MATERIAL	FINISH, REMARKS
			1	POLYAMIDE	NATURAL(WHITE)UL94V-0

CODE NO.(OLD)	DRAWN	DESIGNED	CHECKED	APPROVED	RELEASED
CL	M.KURAMASHI 03.07.14	T.Kamagawa 03.07.17	T.Miyazaki 03.07.17	T.Miyazaki 03.07.17	. .

SCALE	DRAWING NO.	PART NO.
2 : 1	EDC3-160043-01	DF1BA-*DEP-2.5RC
UNITS: mm	HRS HIROSE ELECTRIC CO., LTD	CODE NO. CL541 — 1/1

TO

FORM NO.229

HRS DRAWING FOR REFERENCE