molex

MX150 2X4 BLADE SEALED ASSEMBLY MAT SEAL
BOM AND PIN OUT SHEET

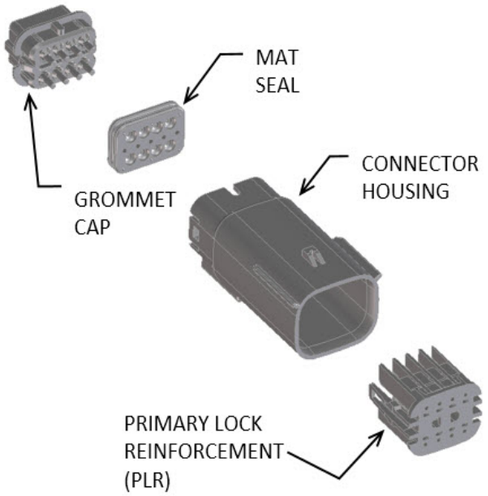

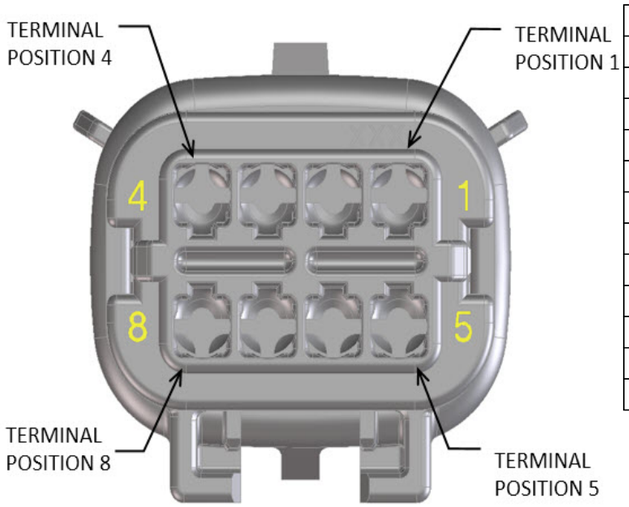

FOR ADDITIONAL INFORMATION SEE SD-33482-0001

ABBREVIATION	DESCRIPTION	COLOR	MATERIAL
A-BLACK	HOUSING, KEYING OPTION A	BLACK	SPS/NYLON GF20
B-LIGHT GRAY	HOUSING, KEYING OPTION B	LIGHT GRAY	SPS/NYLON GF20
C-BROWN	HOUSING, KEYING OPTION C	BROWN	SPS/NYLON GF20
D-GREEN	HOUSING, KEYING OPTION D	GREEN	SPS/NYLON GF20
C-DARK GRAY	HOUSING, KEYING OPTION C	DARK GRAY	SPS/NYLON GF20
D-STONE GRAY	HOUSING, KEYING OPTION D	STONE GRAY	SPS/NYLON GF20
A-YELLOW	HOUSING, KEYING OPTION A	YELLOW	SPS/NYLON GF20
GCP	GROMMET CAP (PLUGGED)	BLACK	SPS/NYLON GF20
GCO	GROMMET CAP (OPEN)	BLACK	SPS/NYLON GF20
PLR	PLR	NATURAL	SPS/NYLON GF20
M-R	MAT SEAL	RUST RED	INHERENTLY LUBRICATED SILICONE
M-B	MAT SEAL	ROYAL BLUE	INHERENTLY LUBRICATED SILICONE

ASSEMBLY DESCRIPTION	ASSEMBLY PART NUMBER	COMPONENT				BLOCKED TERMINALS				STATUS	COMMENT	OPTIONAL ATTACHMENTS SOLD SEPARATELY			
		THE PRESENCE OF AN ABBREVIATION INDICATES THE PRESENCE OF THAT COMPONENT				CAVITY WITH A NUMBER INDICATES BLOCKED TERMINAL POSITION CAVITY WITHOUT A NUMBER INDICATES OPEN TERMINAL POSITION									
		HOUSING KEY/COLOR	GROMMET CAP	PLR	MAT SEAL							BACKSHELL WITH RIBS	BACKSHELL WITHOUT RIBS	90° ADAPTOR WITH RIBS	90° ADAPTOR WITHOUT RIBS
MX150 ASSY BLD 2X4 BK A/8	334820801	A-BLACK	GCO	PLR	M-R	-	-	-	-	OBSOLETE	SEE 334824801	34950-0811	34950-0821	34951-0831	34951-0841
						-	-	-	-						
MX150 ASSY BLD 2X4 LG B/8	334820802	B-LIGHT GRAY	GCO	PLR	M-R	-	-	-	-	OBSOLETE	SEE 334824802	34950-0811	34950-0821	34951-0831	34951-0841
						-	-	-	-						
MX150 ASSY BLD 2X4 BR C/8	334820803	C-BROWN	GCO	PLR	M-R	-	-	-	-	OBSOLETE	SEE 334824852	34950-0811	34950-0821	34951-0831	34951-0841
						-	-	-	-						
MX150 ASSY BLD 2X4 GR D/8	334820804	D-GREEN	GCO	PLR	M-R	-	-	-	-	OBSOLETE	SEE 334824853	34950-0811	34950-0821	34951-0831	34951-0841
						-	-	-	-						
MX150 ASSY BLD 2X4 BK A/7	334820806	A-BLACK	GCP	PLR	M-R	-	-	-	4	OBSOLETE	SEE 334824806	34950-0811	34950-0821	34951-0831	34951-0841
						-	-	-	-						
MX150 ASSY BLD 2X4 LG B/7	334820807	B-LIGHT GRAY	GCP	PLR	M-R	-	-	-	4	OBSOLETE	SEE 334824807	34950-0811	34950-0821	34951-0831	34951-0841
						-	-	-	-						
MX150 ASSY BLD 2X4 BR C/7	334820808	C-BROWN	GCP	PLR	M-R	-	-	-	4	OBSOLETE	SEE 334824902	34950-0811	34950-0821	34951-0831	34951-0841
						-	-	-	-						
MX150 ASSY BLD 2X4 GR D/7	334820809	D-GREEN	GCP	PLR	M-R	-	-	-	4	OBSOLETE		34950-0811	34950-0821	34951-0831	34951-0841
						-	-	-	-						
MX150 ASSY BLD 2X4 BK A/6	334820811	A-BLACK	GCP	PLR	M-R	-	-	-	4	OBSOLETE	SEE 334824811	34950-0811	34950-0821	34951-0831	34951-0841
						5	-	-	-						
MX150 ASSY BLD 2X4 LG B/6	334820812	B-LIGHT GRAY	GCP	PLR	M-R	-	-	-	4	OBSOLETE	SEE 334824812	34950-0811	34950-0821	34951-0831	34951-0841
						5	-	-	-						
MX150 ASSY BLD 2X4 BR C/6	334820813	C-BROWN	GCP	PLR	M-R	-	-	-	4	OBSOLETE		34950-0811	34950-0821	34951-0831	34951-0841
						5	-	-	-						
MX150 ASSY BLD 2X4 GR D/6	334820814	D-GREEN	GCP	PLR	M-R	-	-	-	4	OBSOLETE		34950-0811	34950-0821	34951-0831	34951-0841
						5	-	-	-						
MX150 ASSY BLD 2X4 BK A/5	334820816	A-BLACK	GCP	PLR	M-R	1	-	-	4	OBSOLETE	SEE 334824816	34950-0811	34950-0821	34951-0831	34951-0841
						5	-	-	-						
MX150 ASSY BLD 2X4 LG B/5	334820817	B-LIGHT GRAY	GCP	PLR	M-R	1	-	-	4	OBSOLETE	SEE 334824817	34950-0811	34950-0821	34951-0831	34951-0841
						5	-	-	-						
MX150 ASSY BLD 2X4 BR C/5	334820818	C-BROWN	GCP	PLR	M-R	1	-	-	4	OBSOLETE		34950-0811	34950-0821	34951-0831	34951-0841
						5	-	-	-						
MX150 ASSY BLD 2X4 GR D/5	334820819	D-GREEN	GCP	PLR	M-R	1	-	-	4	OBSOLETE		34950-0811	34950-0821	34951-0831	34951-0841
						5	-	-	-						
MX150 ASSY BLD 2X4 BK A/4	334820821	A-BLACK	GCP	PLR	M-R	1	-	-	4	OBSOLETE	SEE 334824821	34950-0811	34950-0821	34951-0831	34951-0841
						5	-	-	8						

molex

MX150 2X4 BLADE SEALED ASSEMBLY MAT SEAL
BOM AND PIN OUT SHEET

ASSEMBLY DESCRIPTION	ASSEMBLY PART NUMBER	COMPONENT				BLOCKED TERMINALS				STATUS	COMMENT	OPTIONAL ATTACHMENTS SOLD SEPARATELY			
		THE PRESENCE OF AN ABBREVIATION INDICATES THE PRESENCE OF THAT COMPONENT				CAVITY WITH A NUMBER INDICATES BLOCKED TERMINAL POSITION CAVITY WITHOUT A NUMBER INDICATES OPEN TERMINAL POSITION									
		HOUSING KEY/COLOR	GROMMET CAP	PLR	MAT SEAL							BACKSHELL WITH RIBS	BACKSHELL WITHOUT RIBS	90° ADAPTOR WITH RIBS	90° ADAPTOR WITHOUT RIBS
MX150 ASSY BLD 2X4 LG B/4	334820822	B-LIGHT GRAY	GCP	PLR	M-R	1	-	-	4	OBSOLETE	SEE 334824822	34950-0811	34950-0821	34951-0831	34951-0841
						5	-	-	8						
MX150 ASSY BLD 2X4 BR C/4	334820823	C-BROWN	GCP	PLR	M-R	1	-	-	4	OBSOLETE		34950-0811	34950-0821	34951-0831	34951-0841
						5	-	-	8						
MX150 ASSY BLD 2X4 GR D/4	334820824	D-GREEN	GCP	PLR	M-R	1	-	-	4	OBSOLETE		34950-0811	34950-0821	34951-0831	34951-0841
						5	-	-	8						
MX150 ASSY BLD 2X4 BK A/2	334820826	A-BLACK	GCP	PLR	M-R	1	2	3	-	OBSOLETE	SEE 334824826	34950-0811	34950-0821	34951-0831	34951-0841
						-	6	7	8						
MX150 ASSY BLD 2X4 BK A/7	334820827	A-BLACK	GCP	PLR	M-R	-	-	-	-	OBSOLETE	SEE 334824827	34950-0811	34950-0821	34951-0831	34951-0841
						-	-	-	8						
MX150 ASSY BLD 2X4 BK A/6	334820828	A-BLACK	GCP	PLR	M-R	-	-	3	-	OBSOLETE	SEE 334824828	34950-0811	34950-0821	34951-0831	34951-0841
						5	-	-	-						
MX150 ASSY BLD 2X4 BK A/2	334820829	A-BLACK	GCP	PLR	M-R	-	2	3	4	OBSOLETE	SEE 334824829	34950-0811	34950-0821	34951-0831	34951-0841
						5	6	7	-						
MX150 ASSY BLD 2X4 BK A/7	334820830	A-BLACK	GCP	PLR	M-R	-	-	-	-	OBSOLETE	SEE 334824830	34950-0811	34950-0821	34951-0831	34951-0841
						-	6	-	-						
MX150 ASSY BLD 2X4 BK A/5	334820831	A-BLACK	GCP	PLR	M-R	-	-	3	-	OBSOLETE	SEE 334824831	34950-0811	34950-0821	34951-0831	34951-0841
						5	6	-	-						
MX150 ASSY BLD 2X4 BK A/5	334820832	A-BLACK	GCP	PLR	M-R	-	-	-	-	OBSOLETE	SEE 334824832	34950-0811	34950-0821	34951-0831	34951-0841
						5	6	-	8						
MX150 ASSY BLD 2X4 BK A/5	334820833	A-BLACK	GCP	PLR	M-R	1	-	3	-	OBSOLETE	SEE 334824833	34950-0811	34950-0821	34951-0831	34951-0841
						5	-	-	-						
MX150 ASSY BLD 2X4 BK A/0	334820834	A-BLACK	GCP	PLR	M-R	1	2	3	4	OBSOLETE	SEE 334824834	34950-0811	34950-0821	34951-0831	34951-0841
						5	6	7	8						
MX150 ASSY BLD 2X4 BK A/6	334820835	A-BLACK	GCP	PLR	M-R	-	-	-	-	OBSOLETE	SEE 334824835	34950-0811	34950-0821	34951-0831	34951-0841
						-	-	7	8						
MX150 ASSY BLD 2X4 BK A/3	334820836	A-BLACK	GCP	PLR	M-R	-	2	3	-	OBSOLETE	SEE 334824836	34950-0811	34950-0821	34951-0831	34951-0841
						-	6	7	8						
MX150 ASSY BLD 2X4 BK A/6	334820837	A-BLACK	GCP	PLR	M-R	1	-	-	4	OBSOLETE	SEE 334824837	34950-0811	34950-0821	34951-0831	34951-0841
						-	-	-	-						
MX150 ASSY BLD 2X4 BK A/2	334820838	A-BLACK	GCP	PLR	M-R	-	2	3	-	OBSOLETE	SEE 334824838	34950-0811	34950-0821	34951-0831	34951-0841
						5	6	7	8						
MX150 ASSY BLD 2X4 LG B/7	334820839	B-LIGHT GRAY	GCP	PLR	M-R	-	-	-	-	OBSOLETE	SEE 334824839	34950-0811	34950-0821	34951-0831	34951-0841
						-	-	-	8						
MX150 ASSY BLD 2X4 BK A/3	334820840	A-BLACK	GCP	PLR	M-R	-	2	3	-	OBSOLETE	SEE 334824840	34950-0811	34950-0821	34951-0831	34951-0841
						5	6	-	8						
MX150 ASSY BLD 2X4 BK A/6	334820841	A-BLACK	GCP	PLR	M-R	-	-	-	-	OBSOLETE	SEE 334824841	34950-0811	34950-0821	34951-0831	34951-0841
						-	6	7	-						
MX150 ASSY BLD 2X4 BK A/7	334820842	A-BLACK	GCP	PLR	M-R	-	-	-	-	OBSOLETE	SEE 334824842	34950-0811	34950-0821	34951-0831	34951-0841
						-	-	7	-						
MX150 ASSY BLD 2X4 BK A/6	334820843	A-BLACK	GCP	PLR	M-R	-	-	-	4	OBSOLETE	SEE 334824843	34950-0811	34950-0821	34951-0831	34951-0841
						-	-	7	-						
MX150 ASSY BLD 2X4 BK A/6	334820844	A-BLACK	GCP	PLR	M-R	-	-	3	-	OBSOLETE	SEE 334824844	34950-0811	34950-0821	34951-0831	34951-0841
						-	6	-	-						
MX150 ASSY BLD 2X4 BK A/3	334820845	A-BLACK	GCP	PLR	M-R	-	2	3	4	OBSOLETE	SEE 334824845	34950-0811	34950-0821	34951-0831	34951-0841
						5	6	-	-						
MX150 ASSY BLD 2X4 BK A/4	334820846	A-BLACK	GCP	PLR	M-R	-	-	-	4	OBSOLETE	SEE 334824846	34950-0811	34950-0821	34951-0831	34951-0841
						5	-	7	8						
MX150 ASSY BLD 2X4 LG B/0	334820847	B-LIGHT GRAY	GCP	PLR	M-R	1	2	3	4	OBSOLETE	SEE 334824847	34950-0811	34950-0821	34951-0831	34951-0841
						5	6	7	8						
MX150 ASSY BLD 2X4 BK A/6	334820848	A-BLACK	GCP	PLR	M-R	1	-	-	-	OBSOLETE	SEE 334824848	34950-0811	34950-0821	34951-0831	34951-0841
						5	-	-	-						
MX150 ASSY BLD 2X4 LG B/6	334820849	B-LIGHT GRAY	GCP	PLR	M-R	1	-	-	-	OBSOLETE	SEE 334824849	34950-0811	34950-0821	34951-0831	34951-0841
						-	6	-	-						

molex

MX150 2X4 BLADE SEALED ASSEMBLY MAT SEAL
BOM AND PIN OUT SHEET

ASSEMBLY DESCRIPTION	ASSEMBLY PART NUMBER	COMPONENT				BLOCKED TERMINALS				STATUS	COMMENT	OPTIONAL ATTACHMENTS SOLD SEPARATELY			
		THE PRESENCE OF AN ABBREVIATION INDICATES THE PRESENCE OF THAT COMPONENT				CAVITY WITH A NUMBER INDICATES BLOCKED TERMINAL POSITION CAVITY WITHOUT A NUMBER INDICATES OPEN TERMINAL POSITION									
		HOUSING KEY/COLOR	GROMMET CAP	PLR	MAT SEAL							BACKSHELL WITH RIBS	BACKSHELL WITHOUT RIBS	90° ADAPTOR WITH RIBS	90° ADAPTOR WITHOUT RIBS
MX150 ASSY BLD 2X4 YW A/6	334820850	A-YELLOW	GCP	PLR	M-R	1	-	-	4	OBSOLETE	SEE 334824850	34950-0811	34950-0821	34951-0831	34951-0841
						-	-	-	-						
MX150 ASSY BLD 2X4 YW A/8	334820851	A-YELLOW	GCO	PLR	M-R	-	-	-	-	OBSOLETE	SEE 334824851	34950-0811	34950-0821	34951-0831	34951-0841
						-	-	-	-						
MX150 ASSY BLD 2X4 DG C/8	334820852	C-DARK GRAY	GCO	PLR	M-R	-	-	-	-	OBSOLETE	SEE 334824852	34950-0811	34950-0821	34951-0831	34951-0841
						-	-	-	-						
MX150 ASSY BLD 2X4 SG D/8	334820853	D-STONE GRAY	GCO	PLR	M-R	-	-	-	-	OBSOLETE	SEE 334824853	34950-0811	34950-0821	34951-0831	34951-0841
						-	-	-	-						
MX150 ASSY BLD 2X4 BK A/4	334820854	A-BLACK	GCP	PLR	M-R	1	2	3	4	OBSOLETE	SEE 334824854	34950-0811	34950-0821	34951-0831	34951-0841
						-	-	-	-						
MX150 ASSY BLD 2X4 BK A/2	334820855	A-BLACK	GCP	PLR	M-R	1	2	-	-	OBSOLETE	SEE 334824855	34950-0811	34950-0821	34951-0831	34951-0841
						5	6	7	8						
MX150 ASSY BLD 2X4 BK A/6	334820856	A-BLACK	GCP	PLR	M-R	1	2	-	-	OBSOLETE	SEE 334824856	34950-0811	34950-0821	34951-0831	34951-0841
						-	-	-	-						
MX150 ASSY BLD 2X4 BK A/4	334820857	A-BLACK	GCP	PLR	M-R	1	2	3	-	OBSOLETE	SEE 334824857	34950-0811	34950-0821	34951-0831	34951-0841
						5	-	-	-						
MX150 ASSY BLD 2X4 BK A/2	334820858	A-BLACK	GCP	PLR	M-R	1	2	3	4	OBSOLETE	SEE 334824858	34950-0811	34950-0821	34951-0831	34951-0841
						5	-	-	8						
MX150 ASSY BLD 2X4 BK A/3	334820859	A-BLACK	GCP	PLR	M-R	1	-	3	-	OBSOLETE	SEE 334824859	34950-0811	34950-0821	34951-0831	34951-0841
						5	6	7	-						
MX150 ASSY BLD 2X4 BK A/2	334820860	A-BLACK	GCP	PLR	M-R	1	2	3	4	OBSOLETE	SEE 334824860	34950-0811	34950-0821	34951-0831	34951-0841
						5	6	-	-						
MX150 ASSY BLD 2X4 BK A/4	334820861	A-BLACK	GCP	PLR	M-R	1	2	3	-	OBSOLETE	SEE 334824861	34950-0811	34950-0821	34951-0831	34951-0841
						-	6	-	-						
MX150 ASSY BLD 2X4 BK A/6	334820862	A-BLACK	GCP	PLR	M-R	1	-	-	-	OBSOLETE	SEE 334824862	34950-0811	34950-0821	34951-0831	34951-0841
						-	6	-	-						
MX150 ASSY BLD 2X4 BK A/4	334820863	A-BLACK	GCP	PLR	M-R	1	-	-	-	OBSOLETE	SEE 334824863	34950-0811	34950-0821	34951-0831	34951-0841
						-	6	7	8						
MX150 ASSY BLD 2X4 BK A/2	334820864	A-BLACK	GCP	PLR	M-R	-	-	3	4	OBSOLETE	SEE 334824864	34950-0811	34950-0821	34951-0831	34951-0841
						5	6	7	8						
MX150 ASSY BLD 2X4 BK A/5	334820865	A-BLACK	GCP	PLR	M-R	-	-	-	4	OBSOLETE	SEE 334824865	34950-0811	34950-0821	34951-0831	34951-0841
						-	-	7	8						
MX150 ASSY BLD 2X4 BK A/3	334820866	A-BLACK	GCP	PLR	M-R	-	-	-	4	OBSOLETE	SEE 334824866	34950-0811	34950-0821	34951-0831	34951-0841
						5	6	7	8						
MX150 ASSY BLD 2X4 BK A/2	334820867	A-BLACK	GCP	PLR	M-R	-	2	3	4	OBSOLETE	SEE 334824867	34950-0811	34950-0821	34951-0831	34951-0841
						-	6	7	8						
MX150 ASSY BLD 2X4 BK A/5	334820868	A-BLACK	GCP	PLR	M-R	-	-	-	-	OBSOLETE	SEE 334824868	34950-0811	34950-0821	34951-0831	34951-0841
						5	6	7	-						
MX150 ASSY BLD 2X4 BK A/6	334820869	A-BLACK	GCP	PLR	M-R	-	-	3	4	OBSOLETE	SEE 334824869	34950-0811	34950-0821	34951-0831	34951-0841
						-	-	-	-						
MX150 ASSY BLD 2X4 BK A/5	334820870	A-BLACK	GCP	PLR	M-R	-	-	-	-	OBSOLETE	SEE 334824870	34950-0811	34950-0821	34951-0831	34951-0841
						-	6	7	8						
MX150 ASSY BLD 2X4 LG B/6	334820871	B-LIGHT GRAY	GCP	PLR	M-R	-	-	-	-	OBSOLETE	SEE 334824871	34950-0811	34950-0821	34951-0831	34951-0841
						-	-	7	8						
MX150 ASSY BLD 2X4 BK A/6	334820872	A-BLACK	GCP	PLR	M-R	1	-	-	-	OBSOLETE	SEE 334824872	34950-0811	34950-0821	34951-0831	34951-0841
						-	-	-	8						
MX150 ASSY BLD 2X4 BK A/6	334820873	A-BLACK	GCP	PLR	M-R	-	-	-	-	OBSOLETE	SEE 334824873	34950-0811	34950-0821	34951-0831	34951-0841
						-	6	-	8						
MX150 ASSY BLD 2X4 BK A/6	334820874	A-BLACK	GCP	PLR	M-R	-	2	-	-	OBSOLETE	SEE 334824874	34950-0811	34950-0821	34951-0831	34951-0841
						5	-	-	-						
MX150 ASSY BLD 2X4 BK A/7	334820875	A-BLACK	GCP	PLR	M-R	-	-	-	-	OBSOLETE	SEE 334824875	34950-0811	34950-0821	34951-0831	34951-0841
						5	-	-	-						
MX150 ASSY BLD 2X4 LG B/5	334820876	B-LIGHT GRAY	GCP	PLR	M-R	1	-	3	-	OBSOLETE	SEE 334824876	34950-0811	34950-0821	34951-0831	34951-0841
						-	-	-	8						

molex

MX150 2X4 BLADE SEALED ASSEMBLY MAT SEAL
BOM AND PIN OUT SHEET

ASSEMBLY DESCRIPTION	ASSEMBLY PART NUMBER	COMPONENT				BLOCKED TERMINALS				STATUS	COMMENT	OPTIONAL ATTACHMENTS SOLD SEPARATELY			
		THE PRESENCE OF AN ABBREVIATION INDICATES THE PRESENCE OF THAT COMPONENT				CAVITY WITH A NUMBER INDICATES BLOCKED TERMINAL POSITION CAVITY WITHOUT A NUMBER INDICATES OPEN TERMINAL POSITION									
		HOUSING KEY/COLOR	GROMMET CAP	PLR	MAT SEAL							BACKSHELL WITH RIBS	BACKSHELL WITHOUT RIBS	90^0 ADAPTOR WITH RIBS	90^0 ADAPTOR WITHOUT RIBS
MX150 ASSY BLD 2X4 LG B/6	334820877	B-LIGHT GRAY	GCP	PLR	M-R	-	-	3	-	OBSOLETE	SEE 334824877	34950-0811	34950-0821	34951-0831	34951-0841
						-	-	-	8						
MX150 ASSY BLD 2X4 LG B/7	334820878	B-LIGHT GRAY	GCP	PLR	M-R	1	-	-	-	OBSOLETE	SEE 334824878	34950-0811	34950-0821	34951-0831	34951-0841
						-	-	-	-						
MX150 ASSY BLD 2X4 BK A/2	334820879	A-BLACK	GCP	PLR	M-R	1	2	3	4	OBSOLETE	SEE 334824879	34950-0811	34950-0821	34951-0831	34951-0841
						5	-	7	-						
MX150 ASSY BLD 2X4 BK A/7	334820880	A-BLACK	GCP	PLR	M-R	1	-	-	-	OBSOLETE	SEE 334824880	34950-0811	34950-0821	34951-0831	34951-0841
						-	-	-	-						
MX150 ASSY BLD 2X4 BK A/6	334820881	A-BLACK	GCP	PLR	M-R	-	-	-	-	OBSOLETE	SEE 334824881	34950-0811	34950-0821	34951-0831	34951-0841
						5	-	-	8						
MX150 ASSY BLD 2X4 BK A/6	334820882	A-BLACK	GCP	PLR	M-R	-	-	-	4	OBSOLETE	SEE 334824882	34950-0811	34950-0821	34951-0831	34951-0841
						-	6	-	-						
MX150 ASSY BLD 2X4 BK A/6	334820883	A-BLACK	GCP	PLR	M-R	1	-	-	-	OBSOLETE	SEE 334824883	34950-0811	34950-0821	34951-0831	34951-0841
						-	-	7	-						
MX150 ASSY BLD 2X4 BK A/3	334820884	A-BLACK	GCP	PLR	M-R	1	2	3	4	OBSOLETE	SEE 334824884	34950-0811	34950-0821	34951-0831	34951-0841
						-	-	7	-						
MX150 ASSY BLD 2X4 BK A/3	334820885	A-BLACK	GCP	PLR	M-R	1	2	-	-	OBSOLETE	SEE 334824885	34950-0811	34950-0821	34951-0831	34951-0841
						5	6	-	8						
MX150 ASSY BLD 2X4 BK A/5	334820886	A-BLACK	GCP	PLR	M-R	-	2	3	-	OBSOLETE	SEE 334824886	34950-0811	34950-0821	34951-0831	34951-0841
						-	-	-	8						
MX150 ASSY BLD 2X4 BK A/3	334820887	A-BLACK	GCP	PLR	M-R	1	-	3	4	OBSOLETE	SEE 334824887	34950-0811	34950-0821	34951-0831	34951-0841
						-	-	7	8						
MX150 ASSY BLD 2X4 BK A/5	334820888	A-BLACK	GCP	PLR	M-R	-	-	-	4	OBSOLETE	SEE 334824888	34950-0811	34950-0821	34951-0831	34951-0841
						5	6	-	-						
MX150 ASSY BLD 2X4 BK A/2	334820889	A-BLACK	GCP	PLR	M-R	1	2	-	4	OBSOLETE	SEE 334824889	34950-0811	34950-0821	34951-0831	34951-0841
						5	6	-	8						
MX150 ASSY BLD 2X4 BK A/4	334820892	A-BLACK	GCP	PLR	M-R	-	2	3	-	OBSOLETE	SEE 334824892	34950-0811	34950-0821	34951-0831	34951-0841
						5	-	-	8						
MX150 ASSY BLD 2X4 BK A/1	334820893	A-BLACK	GCP	PLR	M-R	1	2	3	4	OBSOLETE	SEE 334824893	34950-0811	34950-0821	34951-0831	34951-0841
						5	-	7	8						
MX150 ASSY BLD 2X4 BK A/4	334820894	A-BLACK	GCP	PLR	M-R	-	-	3	4	OBSOLETE	SEE 334824894	34950-0811	34950-0821	34951-0831	34951-0841
						5	-	7	-						
MX150 ASSY BLD 2X4 BK A/6	334820895	A-BLACK	GCP	PLR	M-R	-	-	3	-	OBSOLETE	SEE 334824895	34950-0811	34950-0821	34951-0831	34951-0841
						-	-	7	-						
MX150 ASSY BLD 2X4 BK A/3	334820896	A-BLACK	GCP	PLR	M-R	1	2	-	4	OBSOLETE	SEE 334824896	34950-0811	34950-0821	34951-0831	34951-0841
						5	-	7	-						
MX150 ASSY BLD 2X4 BK A/5	334820897	A-BLACK	GCP	PLR	M-R	-	-	-	4	OBSOLETE	SEE 334824897	34950-0811	34950-0821	34951-0831	34951-0841
						5	-	7	-						
MX150 ASSY BLD 2X4 BK A/7	334820898	A-BLACK	GCP	PLR	M-R	-	2	-	-	OBSOLETE	SEE 334824898	34950-0811	34950-0821	34951-0831	34951-0841
						-	-	-	-						
MX150 ASSY BLD 2X4 BK A/1	334820899	A-BLACK	GCP	PLR	M-R	1	-	3	4	OBSOLETE	SEE 334824899	34950-0811	34950-0821	34951-0831	34951-0841
						5	6	7	8						
MX150 ASSY BLD 2X4 BK A/8	334824801	A-BLACK	GCO	PLR	M-B	-	-	-	-	SALEABLE		34950-0811	34950-0821	34951-0831	34951-0841
						-	-	-	-						
MX150 ASSY BLD 2X4 LG B/8	334824802	B-LIGHT GRAY	GCO	PLR	M-B	-	-	-	-	SALEABLE		34950-0811	34950-0821	34951-0831	34951-0841
						-	-	-	-						
MX150 ASSY BLD 2X4 BR C/8	334824803	C-BROWN	GCO	PLR	M-B	-	-	-	-	NOT RECOMMENDED	SEE 334824852	34950-0811	34950-0821	34951-0831	34951-0841
						-	-	-	-						
MX150 ASSY BLD 2X4 GR D/8	334824804	D-GREEN	GCO	PLR	M-B	-	-	-	-	NOT RECOMMENDED	SEE 334824853	34950-0811	34950-0821	34951-0831	34951-0841
						-	-	-	-						
MX150 ASSY BLD 2X4 BK A/7	334824806	A-BLACK	GCP	PLR	M-B	-	-	-	4	SALEABLE		34950-0811	34950-0821	34951-0831	34951-0841
						-	-	-	-						
MX150 ASSY BLD 2X4 LG B/7	334824807	B-LIGHT GRAY	GCP	PLR	M-B	-	-	-	4	SALEABLE		34950-0811	34950-0821	34951-0831	34951-0841
						-	-	-	-						

molex

MX150 2X4 BLADE SEALED ASSEMBLY MAT SEAL
BOM AND PIN OUT SHEET

ASSEMBLY DESCRIPTION	ASSEMBLY PART NUMBER	COMPONENT THE PRESENCE OF AN ABBREVIATION INDICATES THE PRESENCE OF THAT COMPONENT				BLOCKED TERMINALS CAVITY WITH A NUMBER INDICATES BLOCKED TERMINAL POSITION CAVITY WITHOUT A NUMBER INDICATES OPEN TERMINAL POSITION				STATUS	COMMENT	OPTIONAL ATTACHMENTS SOLD SEPARATELY			
		HOUSING KEY/COLOR	GROMMET CAP	PLR	MAT SEAL							BACKSHELL WITH RIBS	BACKSHELL WITHOUT RIBS	90^0 ADAPTOR WITH RIBS	90^0 ADAPTOR WITHOUT RIBS
MX150 ASSY BLD 2X4 BR C/7	334824808	C-BROWN	GCP	PLR	M-B	-	-	-	4	NOT RECOMMENDED	SEE 334824902	34950-0811	34950-0821	34951-0831	34951-0841
						-	-	-	-						
MX150 ASSY BLD 2X4 GR D/7	334824809	D-GREEN	GCP	PLR	M-B	-	-	-	4	NOT RECOMMENDED		34950-0811	34950-0821	34951-0831	34951-0841
						-	-	-	-						
MX150 ASSY BLD 2X4 BK A/6	334824811	A-BLACK	GCP	PLR	M-B	-	-	-	4	SALEABLE		34950-0811	34950-0821	34951-0831	34951-0841
						5	-	-	-						
MX150 ASSY BLD 2X4 LG B/6	334824812	B-LIGHT GRAY	GCP	PLR	M-B	-	-	-	4	SALEABLE		34950-0811	34950-0821	34951-0831	34951-0841
						5	-	-	-						
MX150 ASSY BLD 2X4 BR C/6	334824813	C-BROWN	GCP	PLR	M-B	-	-	-	4	NOT RECOMMENDED		34950-0811	34950-0821	34951-0831	34951-0841
						5	-	-	-						
MX150 ASSY BLD 2X4 GR D/6	334824814	D-GREEN	GCP	PLR	M-B	-	-	-	4	NOT RECOMMENDED		34950-0811	34950-0821	34951-0831	34951-0841
						5	-	-	-						
MX150 ASSY BLD 2X4 BK A/5	334824816	A-BLACK	GCP	PLR	M-B	1	-	-	4	SALEABLE		34950-0811	34950-0821	34951-0831	34951-0841
						5	-	-	-						
MX150 ASSY BLD 2X4 LG B/5	334824817	B-LIGHT GRAY	GCP	PLR	M-B	1	-	-	4	SALEABLE		34950-0811	34950-0821	34951-0831	34951-0841
						5	-	-	-						
MX150 ASSY BLD 2X4 BR C/5	334824818	C-BROWN	GCP	PLR	M-B	1	-	-	4	NOT RECOMMENDED		34950-0811	34950-0821	34951-0831	34951-0841
						5	-	-	-						
MX150 ASSY BLD 2X4 GR D/5	334824819	D-GREEN	GCP	PLR	M-B	1	-	-	4	NOT RECOMMENDED		34950-0811	34950-0821	34951-0831	34951-0841
						5	-	-	-						
MX150 ASSY BLD 2X4 BK A/4	334824821	A-BLACK	GCP	PLR	M-B	1	-	-	4	SALEABLE		34950-0811	34950-0821	34951-0831	34951-0841
						5	-	-	8						
MX150 ASSY BLD 2X4 LG B/4	334824822	B-LIGHT GRAY	GCP	PLR	M-B	1	-	-	4	SALEABLE		34950-0811	34950-0821	34951-0831	34951-0841
						5	-	-	8						
MX150 ASSY BLD 2X4 BR C/4	334824823	C-BROWN	GCP	PLR	M-B	1	-	-	4	NOT RECOMMENDED		34950-0811	34950-0821	34951-0831	34951-0841
						5	-	-	8						
MX150 ASSY BLD 2X4 GR D/4	334824824	D-GREEN	GCP	PLR	M-B	1	-	-	4	NOT RECOMMENDED		34950-0811	34950-0821	34951-0831	34951-0841
						5	-	-	8						
MX150 ASSY BLD 2X4 BK A/2	334824826	A-BLACK	GCP	PLR	M-B	1	2	3	-	SALEABLE		34950-0811	34950-0821	34951-0831	34951-0841
						-	6	7	8						
MX150 ASSY BLD 2X4 BK A/7	334824827	A-BLACK	GCP	PLR	M-B	-	-	-	-	SALEABLE		34950-0811	34950-0821	34951-0831	34951-0841
						-	-	-	8						
MX150 ASSY BLD 2X4 BK A/6	334824828	A-BLACK	GCP	PLR	M-B	-	-	3	-	SALEABLE		34950-0811	34950-0821	34951-0831	34951-0841
						5	-	-	-						
MX150 ASSY BLD 2X4 BK A/2	334824829	A-BLACK	GCP	PLR	M-B	-	2	3	4	SALEABLE		34950-0811	34950-0821	34951-0831	34951-0841
						5	6	7	-						
MX150 ASSY BLD 2X4 BK A/7	334824830	A-BLACK	GCP	PLR	M-B	-	-	-	-	SALEABLE		34950-0811	34950-0821	34951-0831	34951-0841
						-	6	-	-						
MX150 ASSY BLD 2X4 BK A/5	334824831	A-BLACK	GCP	PLR	M-B	-	-	3	-	SALEABLE		34950-0811	34950-0821	34951-0831	34951-0841
						5	6	-	-						
MX150 ASSY BLD 2X4 BK A/5	334824832	A-BLACK	GCP	PLR	M-B	-	-	-	-	SALEABLE		34950-0811	34950-0821	34951-0831	34951-0841
						5	6	-	8						
MX150 ASSY BLD 2X4 BK A/5	334824833	A-BLACK	GCP	PLR	M-B	1	-	3	-	SALEABLE		34950-0811	34950-0821	34951-0831	34951-0841
						5	-	-	-						
MX150 ASSY BLD 2X4 BK A/0	334824834	A-BLACK	GCP	PLR	M-B	1	2	3	4	SALEABLE		34950-0811	34950-0821	34951-0831	34951-0841
						5	6	7	8						
MX150 ASSY BLD 2X4 BK A/6	334824835	A-BLACK	GCP	PLR	M-B	-	-	-	-	SALEABLE		34950-0811	34950-0821	34951-0831	34951-0841
						-	-	7	8						
MX150 ASSY BLD 2X4 BK A/3	334824836	A-BLACK	GCP	PLR	M-B	-	2	3	-	SALEABLE		34950-0811	34950-0821	34951-0831	34951-0841
						-	6	7	8						
MX150 ASSY BLD 2X4 BK A/6	334824837	A-BLACK	GCP	PLR	M-B	1	-	-	4	SALEABLE		34950-0811	34950-0821	34951-0831	34951-0841
						-	-	-	-						
MX150 ASSY BLD 2X4 BK A/2	334824838	A-BLACK	GCP	PLR	M-B	-	2	3	-	SALEABLE		34950-0811	34950-0821	34951-0831	34951-0841
						5	6	7	8						

molex

MX150 2X4 BLADE SEALED ASSEMBLY MAT SEAL
BOM AND PIN OUT SHEET

ASSEMBLY DESCRIPTION	ASSEMBLY PART NUMBER	COMPONENT				BLOCKED TERMINALS				STATUS	COMMENT	OPTIONAL ATTACHMENTS SOLD SEPARATELY			
		THE PRESENCE OF AN ABBREVIATION INDICATES THE PRESENCE OF THAT COMPONENT				CAVITY WITH A NUMBER INDICATES BLOCKED TERMINAL POSITION CAVITY WITHOUT A NUMBER INDICATES OPEN TERMINAL POSITION									
		HOUSING KEY/COLOR	GROMMET CAP	PLR	MAT SEAL							BACKSHELL WITH RIBS	BACKSHELL WITHOUT RIBS	90^0 ADAPTOR WITH RIBS	90^0 ADAPTOR WITHOUT RIBS
MX150 ASSY BLD 2X4 LG B/7	334824839	B-LIGHT GRAY	GCP	PLR	M-B	-	-	-	-	SALEABLE		34950-0811	34950-0821	34951-0831	34951-0841
						-	-	-	8						
MX150 ASSY BLD 2X4 BK A/3	334824840	A-BLACK	GCP	PLR	M-B	-	2	3	-	SALEABLE		34950-0811	34950-0821	34951-0831	34951-0841
						5	6	-	8						
MX150 ASSY BLD 2X4 BK A/6	334824841	A-BLACK	GCP	PLR	M-B	-	-	-	-	SALEABLE		34950-0811	34950-0821	34951-0831	34951-0841
						-	6	7	-						
MX150 ASSY BLD 2X4 BK A/7	334824842	A-BLACK	GCP	PLR	M-B	-	-	-	-	SALEABLE		34950-0811	34950-0821	34951-0831	34951-0841
						-	-	7	-						
MX150 ASSY BLD 2X4 BK A/6	334824843	A-BLACK	GCP	PLR	M-B	-	-	-	4	SALEABLE		34950-0811	34950-0821	34951-0831	34951-0841
						-	-	7	-						
MX150 ASSY BLD 2X4 BK A/6	334824844	A-BLACK	GCP	PLR	M-B	-	-	3	-	SALEABLE		34950-0811	34950-0821	34951-0831	34951-0841
						-	6	-	-						
MX150 ASSY BLD 2X4 BK A/3	334824845	A-BLACK	GCP	PLR	M-B	-	2	3	4	SALEABLE		34950-0811	34950-0821	34951-0831	34951-0841
						5	6	-	-						
MX150 ASSY BLD 2X4 BK A/4	334824846	A-BLACK	GCP	PLR	M-B	-	-	-	4	SALEABLE		34950-0811	34950-0821	34951-0831	34951-0841
						5	-	7	8						
MX150 ASSY BLD 2X4 LG B/0	334824847	B-LIGHT GRAY	GCP	PLR	M-B	1	2	3	4	SALEABLE		34950-0811	34950-0821	34951-0831	34951-0841
						5	6	7	8						
MX150 ASSY BLD 2X4 BK A/6	334824848	A-BLACK	GCP	PLR	M-B	1	-	-	-	SALEABLE		34950-0811	34950-0821	34951-0831	34951-0841
						5	-	-	-						
MX150 ASSY BLD 2X4 LG B/6	334824849	B-LIGHT GRAY	GCP	PLR	M-B	1	-	-	-	SALEABLE		34950-0811	34950-0821	34951-0831	34951-0841
						-	6	-	-						
MX150 ASSY BLD 2X4 YW A/6	334824850	A-YELLOW	GCP	PLR	M-B	1	-	-	4	SALEABLE		34950-0811	34950-0821	34951-0831	34951-0841
						-	-	-	-						
MX150 ASSY BLD 2X4 YW A/8	334824851	A-YELLOW	GCO	PLR	M-B	-	-	-	-	SALEABLE		34950-0811	34950-0821	34951-0831	34951-0841
						-	-	-	-						
MX150 ASSY BLD 2X4 DG C/8	334824852	C-DARK GRAY	GCO	PLR	M-B	-	-	-	-	SALEABLE		34950-0811	34950-0821	34951-0831	34951-0841
						-	-	-	-						
MX150 ASSY BLD 2X4 SG D/8	334824853	D-STONE GRAY	GCO	PLR	M-B	-	-	-	-	SALEABLE		34950-0811	34950-0821	34951-0831	34951-0841
						-	-	-	-						
MX150 ASSY BLD 2X4 BK A/4	334824854	A-BLACK	GCP	PLR	M-B	1	2	3	4	SALEABLE		34950-0811	34950-0821	34951-0831	34951-0841
						-	-	-	-						
MX150 ASSY BLD 2X4 BK A/2	334824855	A-BLACK	GCP	PLR	M-B	1	2	-	-	SALEABLE		34950-0811	34950-0821	34951-0831	34951-0841
						5	6	7	8						
MX150 ASSY BLD 2X4 BK A/6	334824856	A-BLACK	GCP	PLR	M-B	1	2	-	-	SALEABLE		34950-0811	34950-0821	34951-0831	34951-0841
						-	-	-	-						
MX150 ASSY BLD 2X4 BK A/4	334824857	A-BLACK	GCP	PLR	M-B	1	2	3	-	SALEABLE		34950-0811	34950-0821	34951-0831	34951-0841
						5	-	-	-						
MX150 ASSY BLD 2X4 BK A/2	334824858	A-BLACK	GCP	PLR	M-B	1	2	3	4	SALEABLE		34950-0811	34950-0821	34951-0831	34951-0841
						5	-	-	8						
MX150 ASSY BLD 2X4 BK A/3	334824859	A-BLACK	GCP	PLR	M-B	1	-	3	-	SALEABLE		34950-0811	34950-0821	34951-0831	34951-0841
						5	6	7	-						
MX150 ASSY BLD 2X4 BK A/2	334824860	A-BLACK	GCP	PLR	M-B	1	2	3	4	SALEABLE		34950-0811	34950-0821	34951-0831	34951-0841
						5	6	-	-						
MX150 ASSY BLD 2X4 BK A/4	334824861	A-BLACK	GCP	PLR	M-B	1	2	3	-	SALEABLE		34950-0811	34950-0821	34951-0831	34951-0841
						-	6	-	-						
MX150 ASSY BLD 2X4 BK A/6	334824862	A-BLACK	GCP	PLR	M-B	1	-	-	-	SALEABLE		34950-0811	34950-0821	34951-0831	34951-0841
						-	6	-	-						
MX150 ASSY BLD 2X4 BK A/4	334824863	A-BLACK	GCP	PLR	M-B	1	-	-	-	SALEABLE		34950-0811	34950-0821	34951-0831	34951-0841
						-	6	7	8						
MX150 ASSY BLD 2X4 BK A/2	334824864	A-BLACK	GCP	PLR	M-B	-	-	3	4	SALEABLE		34950-0811	34950-0821	34951-0831	34951-0841
						5	6	7	8						
MX150 ASSY BLD 2X4 BK A/5	334824865	A-BLACK	GCP	PLR	M-B	-	-	-	4	SALEABLE		34950-0811	34950-0821	34951-0831	34951-0841
						-	-	7	8						

molex

MX150 2X4 BLADE SEALED ASSEMBLY MAT SEAL
BOM AND PIN OUT SHEET

ASSEMBLY DESCRIPTION	ASSEMBLY PART NUMBER	COMPONENT				BLOCKED TERMINALS				STATUS	COMMENT	OPTIONAL ATTACHMENTS SOLD SEPARATELY			
		THE PRESENCE OF AN ABBREVIATION INDICATES THE PRESENCE OF THAT COMPONENT				CAVITY WITH A NUMBER INDICATES BLOCKED TERMINAL POSITION CAVITY WITHOUT A NUMBER INDICATES OPEN TERMINAL POSITION									
		HOUSING KEY/COLOR	GROMMET CAP	PLR	MAT SEAL							BACKSHELL WITH RIBS	BACKSHELL WITHOUT RIBS	90^0 ADAPTOR WITH RIBS	90^0 ADAPTOR WITHOUT RIBS
MX150 ASSY BLD 2X4 BK A/3	334824866	A-BLACK	GCP	PLR	M-B	-	-	-	4	SALEABLE		34950-0811	34950-0821	34951-0831	34951-0841
						5	6	7	8						
MX150 ASSY BLD 2X4 BK A/2	334824867	A-BLACK	GCP	PLR	M-B	-	2	3	4	SALEABLE		34950-0811	34950-0821	34951-0831	34951-0841
						-	6	7	8						
MX150 ASSY BLD 2X4 BK A/5	334824868	A-BLACK	GCP	PLR	M-B	-	-	-	-	SALEABLE		34950-0811	34950-0821	34951-0831	34951-0841
						5	6	7	-						
MX150 ASSY BLD 2X4 BK A/6	334824869	A-BLACK	GCP	PLR	M-B	-	-	3	4	SALEABLE		34950-0811	34950-0821	34951-0831	34951-0841
						-	-	-	-						
MX150 ASSY BLD 2X4 BK A/5	334824870	A-BLACK	GCP	PLR	M-B	-	-	-	-	SALEABLE		34950-0811	34950-0821	34951-0831	34951-0841
						-	6	7	8						
MX150 ASSY BLD 2X4 LG B/6	334824871	B-LIGHT GRAY	GCP	PLR	M-B	-	-	-	-	SALEABLE		34950-0811	34950-0821	34951-0831	34951-0841
						-	-	7	8						
MX150 ASSY BLD 2X4 BK A/6	334824872	A-BLACK	GCP	PLR	M-B	1	-	-	-	SALEABLE		34950-0811	34950-0821	34951-0831	34951-0841
						-	-	-	8						
MX150 ASSY BLD 2X4 BK A/6	334824873	A-BLACK	GCP	PLR	M-B	-	-	-	-	SALEABLE		34950-0811	34950-0821	34951-0831	34951-0841
						-	6	-	8						
MX150 ASSY BLD 2X4 BK A/6	334824874	A-BLACK	GCP	PLR	M-B	-	2	-	-	SALEABLE		34950-0811	34950-0821	34951-0831	34951-0841
						5	-	-	-						
MX150 ASSY BLD 2X4 BK A/7	334824875	A-BLACK	GCP	PLR	M-B	-	-	-	-	SALEABLE		34950-0811	34950-0821	34951-0831	34951-0841
						5	-	-	-						
MX150 ASSY BLD 2X4 LG B/5	334824876	B-LIGHT GRAY	GCP	PLR	M-B	1	-	3	-	SALEABLE		34950-0811	34950-0821	34951-0831	34951-0841
						-	-	-	8						
MX150 ASSY BLD 2X4 LG B/6	334824877	B-LIGHT GRAY	GCP	PLR	M-B	-	-	3	-	SALEABLE		34950-0811	34950-0821	34951-0831	34951-0841
						-	-	-	8						
MX150 ASSY BLD 2X4 LG B/7	334824878	B-LIGHT GRAY	GCP	PLR	M-B	1	-	-	-	SALEABLE		34950-0811	34950-0821	34951-0831	34951-0841
						-	-	-	-						
MX150 ASSY BLD 2X4 BK A/2	334824879	A-BLACK	GCP	PLR	M-B	1	2	3	4	SALEABLE		34950-0811	34950-0821	34951-0831	34951-0841
						5	-	7	-						
MX150 ASSY BLD 2X4 BK A/7	334824880	A-BLACK	GCP	PLR	M-B	1	-	-	-	SALEABLE		34950-0811	34950-0821	34951-0831	34951-0841
						-	-	-	-						
MX150 ASSY BLD 2X4 BK A/6	334824881	A-BLACK	GCP	PLR	M-B	-	-	-	-	SALEABLE		34950-0811	34950-0821	34951-0831	34951-0841
						5	-	-	8						
MX150 ASSY BLD 2X4 BK A/6	334824882	A-BLACK	GCP	PLR	M-B	-	-	-	4	SALEABLE		34950-0811	34950-0821	34951-0831	34951-0841
						-	6	-	-						
MX150 ASSY BLD 2X4 BK A/6	334824883	A-BLACK	GCP	PLR	M-B	1	-	-	-	SALEABLE		34950-0811	34950-0821	34951-0831	34951-0841
						-	-	7	-						
MX150 ASSY BLD 2X4 BK A/3	334824884	A-BLACK	GCP	PLR	M-B	1	2	3	4	SALEABLE		34950-0811	34950-0821	34951-0831	34951-0841
						-	-	7	-						
MX150 ASSY BLD 2X4 BK A/3	334824885	A-BLACK	GCP	PLR	M-B	1	2	-	-	SALEABLE		34950-0811	34950-0821	34951-0831	34951-0841
						5	6	-	8						
MX150 ASSY BLD 2X4 BK A/5	334824886	A-BLACK	GCP	PLR	M-B	-	2	3	-	SALEABLE		34950-0811	34950-0821	34951-0831	34951-0841
						-	-	-	8						
MX150 ASSY BLD 2X4 BK A/3	334824887	A-BLACK	GCP	PLR	M-B	1	-	3	4	SALEABLE		34950-0811	34950-0821	34951-0831	34951-0841
						-	-	7	8						
MX150 ASSY BLD 2X4 BK A/5	334824888	A-BLACK	GCP	PLR	M-B	-	-	-	4	SALEABLE		34950-0811	34950-0821	34951-0831	34951-0841
						5	6	-	-						
MX150 ASSY BLD 2X4 BK A/2	334824889	A-BLACK	GCP	PLR	M-B	1	2	-	4	SALEABLE		34950-0811	34950-0821	34951-0831	34951-0841
						5	6	-	8						
MX150 ASSY BLD 2X4 BK A/6	334824890	A-BLACK	GCP	PLR	M-B	-	-	-	4	SALEABLE		34950-0811	34950-0821	34951-0831	34951-0841
						-	-	-	8						
MX150 ASSY BLD 2X4 BK A/5	334824891	A-BLACK	GCP	PLR	M-B	-	-	-	4	SALEABLE		34950-0811	34950-0821	34951-0831	34951-0841
						5	-	-	8						
MX150 ASSY BLD 2X4 BK A/4	334824892	A-BLACK	GCP	PLR	M-B	-	2	3	-	SALEABLE		34950-0811	34950-0821	34951-0831	34951-0841
						5	-	-	8						

molex

MX150 2X4 BLADE SEALED ASSEMBLY MAT SEAL
BOM AND PIN OUT SHEET

ASSEMBLY DESCRIPTION	ASSEMBLY PART NUMBER	COMPONENT				BLOCKED TERMINALS				STATUS	COMMENT	OPTIONAL ATTACHMENTS SOLD SEPARATELY			
		THE PRESENCE OF AN ABBREVIATION INDICATES THE PRESENCE OF THAT COMPONENT				CAVITY WITH A NUMBER INDICATES BLOCKED TERMINAL POSITION CAVITY WITHOUT A NUMBER INDICATES OPEN TERMINAL POSITION									
		HOUSING KEY/COLOR	GROMMET CAP	PLR	MAT SEAL							BACKSHELL WITH RIBS	BACKSHELL WITHOUT RIBS	90° ADAPTOR WITH RIBS	90° ADAPTOR WITHOUT RIBS
MX150 ASSY BLD 2X4 BK A/1	334824893	A-BLACK	GCP	PLR	M-B	1	2	3	4	SALEABLE		34950-0811	34950-0821	34951-0831	34951-0841
						5	-	7	8						
MX150 ASSY BLD 2X4 BK A/4	334824894	A-BLACK	GCP	PLR	M-B	-	-	3	4	SALEABLE		34950-0811	34950-0821	34951-0831	34951-0841
						5	-	7	-						
MX150 ASSY BLD 2X4 BK A/6	334824895	A-BLACK	GCP	PLR	M-B	-	-	3	-	SALEABLE		34950-0811	34950-0821	34951-0831	34951-0841
						-	-	7	-						
MX150 ASSY BLD 2X4 BK A/3	334824896	A-BLACK	GCP	PLR	M-B	1	2	-	4	SALEABLE		34950-0811	34950-0821	34951-0831	34951-0841
						5	-	7	-						
MX150 ASSY BLD 2X4 BK A/5	334824897	A-BLACK	GCP	PLR	M-B	-	-	-	4	SALEABLE		34950-0811	34950-0821	34951-0831	34951-0841
						5	-	7	-						
MX150 ASSY BLD 2X4 BK A/7	334824898	A-BLACK	GCP	PLR	M-B	-	2	-	-	SALEABLE		34950-0811	34950-0821	34951-0831	34951-0841
						-	-	-	-						
MX150 ASSY BLD 2X4 BK A/1	334824899	A-BLACK	GCP	PLR	M-B	1	-	3	4	SALEABLE		34950-0811	34950-0821	34951-0831	34951-0841
						5	6	7	8						
MX150 ASSY BLD 2X4 BK A/4	334824900	A-BLACK	GCP	PLR	M-B	-	-	-	-	SALEABLE		34950-0811	34950-0821	34951-0831	34951-0841
						5	6	7	8						
MX150 ASSY BLD 2X4 BK A/7	334824901	A-BLACK	GCP	PLR	M-B	-	-	3	-	SALEABLE		34950-0811	34950-0821	34951-0831	34951-0841
						-	-	-	-						
MX150 ASSY BLD 2X4 DG C/7	334824902	C-DARK GRAY	GCP	PLR	M-B	-	-	-	4	SALEABLE		34950-0811	34950-0821	34951-0831	34951-0841
						-	-	-	-						
MX150 ASSY BLD 2X4 BK A/6	334825000	A-BLACK	GCP	PLR	M-B	-	2	-	-	SALEABLE		34950-0811	34950-0821	34951-0831	34951-0841
						-	-	-	8						
MX150 ASSY BLD 2X4 BK A/8	334825001	A-BLACK	GCO	PLR	M-B	-	-	-	-	SALEABLE		34950-0811	34950-0821	34951-0831	34951-0841
						-	-	-	-						
MX150 ASSY BLD 2X4 BK A/2	334825002	A-BLACK	GCP	PLR	M-B	1	2	3	-	SALEABLE		34950-0811	34950-0821	34951-0831	34951-0841
						5	6	-	8						
MX150 ASSY BLD 2X4 BK A/5	334825003	A-BLACK	GCP	PLR	M-B	-	-	-	-	SALEABLE		34950-0811	34950-0821	34951-0831	34951-0841
						5	6	7	-						
MX150 ASSY BLD 2X4 BK A/5	334825004	A-BLACK	GCP	PLR	M-B	-	-	-	-	SALEABLE		34950-0811	34950-0821	34951-0831	34951-0841
						-	6	7	8						
MX150 ASSY BLD 2X4 BK A/3	334825005	A-BLACK	GCP	PLR	M-B	1	-	-	-	SALEABLE		34950-0811	34950-0821	34951-0831	34951-0841
						5	6	7	8						
MX150 ASSY BLD 2X4 LG B/4	334825006	B-LIGHT GRAY	GCP	PLR	M-B	-	2	3	4	SALEABLE		34950-0811	34950-0821	34951-0831	34951-0841
						-	-	7	-						
MX150 ASSY BLD 2X4 BK A/3	334825007	A-BLACK	GCP	PLR	M-B	1	2	3	4	SALEABLE		34950-0811	34950-0821	34951-0831	34951-0841
						5	-	-	-						
MX150 ASSY BLD 2X4 BK A/3	334825008	A-BLACK	GCP	PLR	M-B	1	-	3	4	SALEABLE		34950-0811	34950-0821	34951-0831	34951-0841
						-	-	7	8						
MX150 ASSY BLD 2X4 BK A/3	334825009	A-BLACK	GCP	PLR	M-B	1	2	-	4	SALEABLE		34950-0811	34950-0821	34951-0831	34951-0841
						5	6	-	-						
MX150 ASSY BLD 2X4 LG B/6	334825010	B-LIGHT GRAY	GCP	PLR	M-B	-	-	-	4	SALEABLE		34950-0811	34950-0821	34951-0831	34951-0841
						-	-	7	-						
MX150 ASSY BLD 2X4 LG B/4	334825011	B-LIGHT GRAY	GCP	PLR	M-B	-	-	-	-	SALEABLE		34950-0811	34950-0821	34951-0831	34951-0841
						5	6	7	8						
MX150 ASSY BLD 2X4 BK A/4	334825012	A-BLACK	GCP	PLR	M-B	-	2	3	4	SALEABLE		34950-0811	34950-0821	34951-0831	34951-0841
						-	-	7	-						
MX150 ASSY BLD 2X4 BK A/4	334825013	A-BLACK	GCP	PLR	M-B	-	-	-	-	SALEABLE		34950-0811	34950-0821	34951-0831	34951-0841
						5	6	7	8						
MX150 ASSY BLD 2X4 BK A/7	334825014	A-BLACK	GCP	PLR	M-B	-	-	3	-	SALEABLE		34950-0811	34950-0821	34951-0831	34951-0841
						-	-	-	-						
MX150 ASSY BLD 2X4 BK A/7	334825015	A-BLACK	GCP	PLR	M-B	1	-	-	-	SALEABLE		34950-0811	34950-0821	34951-0831	34951-0841
						-	-	-	-						
MX150 ASSY BLD 2X4 BK A/5	334825016	A-BLACK	GCP	PLR	M-B	-	-	3	-	SALEABLE		34950-0811	34950-0821	34951-0831	34951-0841
						-	-	7	8						

molex

MX150 2X4 BLADE SEALED ASSEMBLY MAT SEAL
BOM AND PIN OUT SHEET

ASSEMBLY DESCRIPTION	ASSEMBLY PART NUMBER	COMPONENT				BLOCKED TERMINALS				STATUS	COMMENT	OPTIONAL ATTACHMENTS SOLD SEPARATELY			
		THE PRESENCE OF AN ABBREVIATION INDICATES THE PRESENCE OF THAT COMPONENT				CAVITY WITH A NUMBER INDICATES BLOCKED TERMINAL POSITION CAVITY WITHOUT A NUMBER INDICATES OPEN TERMINAL POSITION									
		HOUSING KEY/COLOR	GROMMET CAP	PLR	MAT SEAL							BACKSHELL WITH RIBS	BACKSHELL WITHOUT RIBS	90^0 ADAPTOR WITH RIBS	90^0 ADAPTOR WITHOUT RIBS
MX150 ASSY BLD 2X4 BK A/6	334825017	A-BLACK	GCP	PLR	M-B	-	-	3	-	SALEABLE		34950-0811	34950-0821	34951-0831	34951-0841
						5	-	-	-						
MX150 ASSY BLD 2X4 DG C/7	334825018	C-DARK GRAY	GCP	PLR	M-B	-	-	-	-	SALEABLE		34950-0811	34950-0821	34951-0831	34951-0841
						-	-	-	8						

TABLE OF CONTENTS

SHEET NO.	SHEET DESCRIPTION
1	NOTES AND BOM
2	CONFIGURATIONS
3-4	KEY CONFIGURATIONS
5	BLADE SEALED ASSEMBLY
6	SYSTEM PACKAGING
7	BACKSHELL NOTES
8	BACKSHELL
9	BACKSHELL CONFIGURATIONS

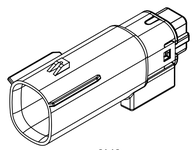

2X2

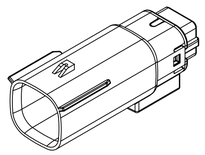

2X3

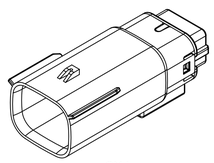

2X4

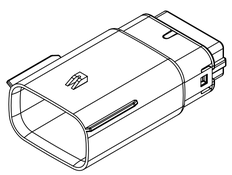

2X6

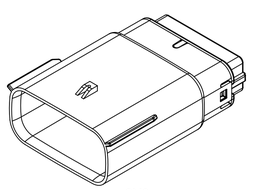

2X8

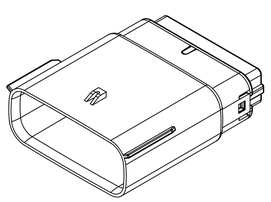

2X10

NOTES: VALID UNLESS OTHERWISE SPECIFIED

1. GENERAL:
a. APPLICATION SPECIFICATION SEE: AS-33472-100
-CONTAINS: PRODUCT INTRODUCTION, PRODUCT SUMMARY, CONNECTOR ASSEMBLY, PACKAGING INFORMATION, CONNECTOR MATING, SERVICE INSTRUCTIONS, ELECTRICAL CONTINUITY CHECKING, CRIMPING, AND TROUBLESHOOTING.
-DESIGNED TO MATE WITH RECEPTACLE SEALED ASSEMBLY AS SPECIFIED IN THE MATING CONNECTOR DRAWINGS CHART.
*DENOTES DRAWINGS THAT CAN BE ACCESSED AT <http://ewcap.uscarteams.org/>.
-ASSEMBLY SHIPPED WITH PLR IN PRE-LOCK POSITION (SEE PLR PRE-LOCK VIEW SHEET 5).

b. PRODUCT SPECIFICATION SEE:
-STANDARD CONFIGURATION: PS-33472-000
-UL V0 CONFIGURATION: TBD
CONTAINS: PRODUCT INTRODUCTION, PRODUCT SUMMARY, RATINGS (CURRENT, TEMPERATURE, SEALING, AND FLAMMABILITY), TERMINALS, WIRE DIAMETER RANGE, PRODUCT VALIDATION, AND PRODUCT DEVIATIONS.
E3 c. PACKAGING SPECIFICATION PER MOLEX DRAWING: PK-31300-903
d. PARTS MUST BE IN COMPLIANCE TO MOLEX CHEMICAL SUBSTANCES FOR PRODUCTS AND PACKAGING SPECIFICATION: QEHS-699000-300
e. DATA MUST BE SUBMITTED UNDER THE MOLEX PART NUMBER TO IMDS (COMPANY ID#13255)

2. DESIGN - MATERIALS:
a. FOR BILL OF MATERIALS: SEE BOM CHART

3. DESIGN - GEOMETRY:
a. THE 3-D CAD DATA IS BASIC (WITHOUT TOLERANCE) AND MASTER FOR THIS PART WITH THE EXCEPTION OF UNDERLINED DIMENSIONS. DIMENSIONAL INFORMATION NOT SHOWN ON THIS DRAWING IS DEFINED BY THE DATA FILE AT ITS LATEST REVISION.
b. GEOMETRIC DIMENSIONS AND TOLERANCES PER ASME Y14.5M-2009
c. EDGES AND UNDIMENSIONED DETAILS PER ISO13715
d. CORNERS SHOWN AS SHARP TO BE R 0.2 MAX.
e. LETTERING SHALL BE 0.15 MAX RAISED IN 0.25 MAX RECESS PAD. THIS INCLUDES RECYCLING CODE, CAVITY ID, VENDOR IDENTIFICATION, AND CUSTOMER MATERIAL NUMBER.
f. VISUAL DEFECTS SHALL MEET COSMETIC STANDARD PS-45499-002 (Class B).
g. LASER MARKING:
1. PART NUMBER
2. DAY OF THE YEAR
3. SHIFT
4. YEAR
FOR ADDITIONAL INFORMATION SEE SECTION 5 UNDER PROCEDURES IN ES-34735-008.

E3

BILL OF MATERIALS (BOM)

DESCRIPTION	DRAWING NO.
UL V0 VERSION	SD-160084-0002
STANDARD 2X2	334820402
STANDARD 2X3	334820602
STANDARD 2X4	334820802
STANDARD 2X6	334821202
STANDARD 2X8	334821602
STANDARD 2X10	334822002

MATING CONNECTOR DRAWINGS

DESCRIPTION	MOLEX INLINE
2X2	SD-33472-0001
2X3	SD-33472-0001
2X4	SD-33472-0001
2X6	SD-33472-0001
2X8	SD-33472-0001
2X10	SD-33472-0001

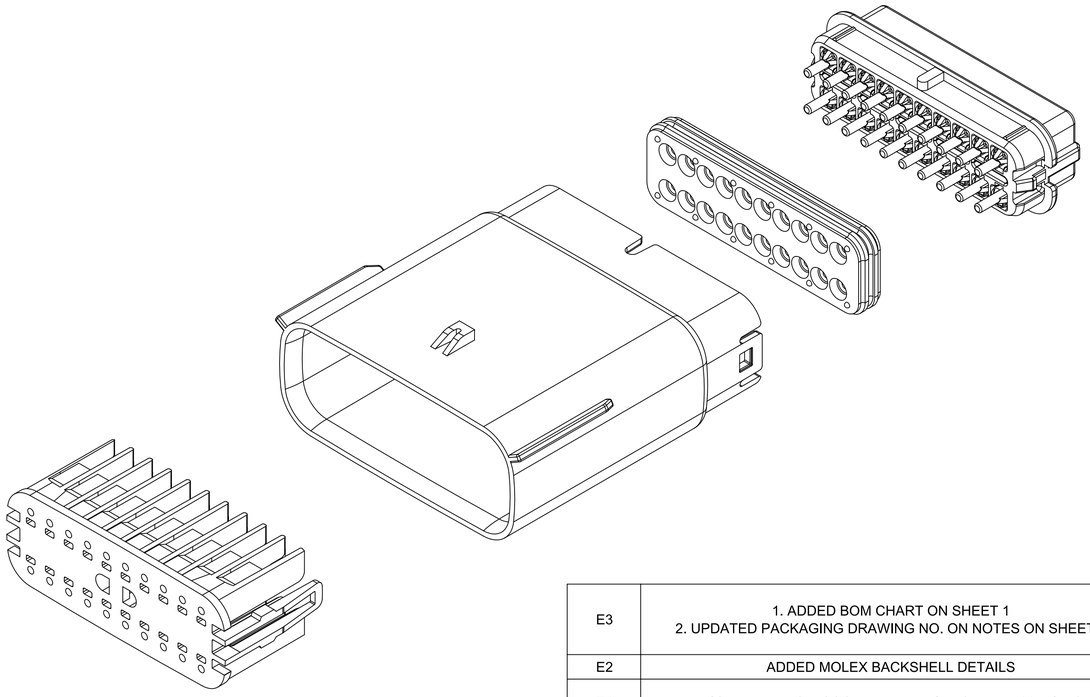

REV	REV DESCRIPTION
E3	1. ADDED BOM CHART ON SHEET 1 2. UPDATED PACKAGING DRAWING NO. ON NOTES ON SHEET 1
E2	ADDED MOLEX BACKSHELL DETAILS
E1	MIGRATED FROM COCREATE AND IMPORTED DXF FILES
E	ADDED CHARTED DIMENSIONS FOR 2X2, 2X4, 2X6 AND 2X8 WITH CLIPSLOT
D	MINOR GEOMETRY CHANGE FOR UL V0
C3	ADD 2X4
C2	ADD 2X3
C1	ADD UL V0 CONFIGURATIONS
C	ADD 2X8
B1	ADD 2X6 BACKSHELL INFO
B	ADD 2X6
A	INITIAL RELEASE

INSPECTION NUMBER LOG
LAST NUMBER: 9
ADDED:
REMOVED:

THIS DRAWING CONTAINS INFORMATION THAT IS PROPRIETARY TO MOLEX ELECTRONIC TECHNOLOGIES, LLC AND SHOULD NOT BE USED WITHOUT WRITTEN PERMISSION

FUNCTIONAL SYMBOLS: FA = 0, FC = 0, FP = 0
DIVISIONAL SYMBOLS

DIMENSION UNITS	SCALE
mm	1.5:1

GENERAL TOLERANCES (UNLESS SPECIFIED)	
ANGULAR TOL	± 1°
4 PLACES	±
3 PLACES	±
2 PLACES	± 0.100
1 PLACE	± 0.20
0 PLACES	±

DRAFT WHERE APPLICABLE MUST REMAIN WITHIN DIMENSIONS

CURRENT REV DESC:

STATUS: Production
DRWN: Yann Chen 2023-09-26
CHK'D: Yu Chao Fu 2023-09-26
APPR: Elvis Song 2023-09-27

THIRD ANGLE PROJECTION | DRAWING: A1-SIZE | SERIES: 33482

molex

MX150 BLADE
DUAL ROW SEALED ASSEMBLY

PRODUCT SALES DRAWING

DOCUMENT NUMBER	DOC TYPE	DOC PART	REVISION
SD-33482-0001	PSD	001	E3

MATERIAL NUMBER | CUSTOMER: GENERAL MARKET | SHEET NUMBER: 1 OF 11

FORMAT: TLEngineerA1
REVISION: E
DATE: 2023/09/01

SHEET DESCRIPTION
CONFIGURATIONS

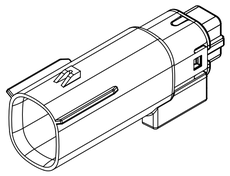

2X2 - STANDARD (STD)

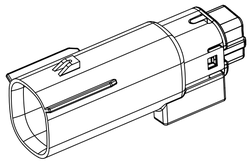

2X2 - UL V0*

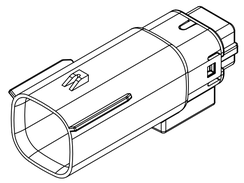

2X3 - STANDARD (STD)

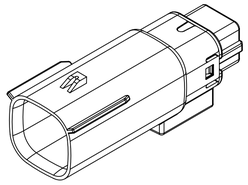

2X3 - LENGTHENED

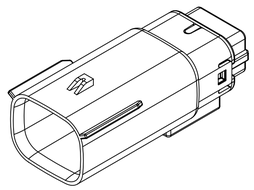

2X4 - STANDARD (STD)

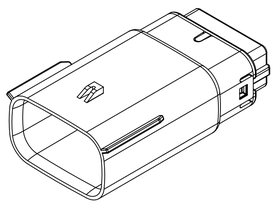

2X6 - STANDARD (STD)

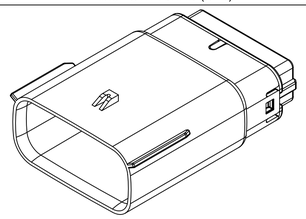

2X8 - STANDARD (STD)

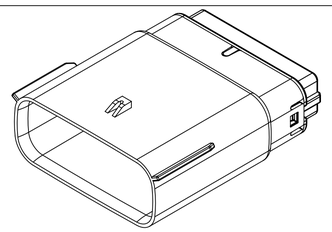

2X10 - STANDARD (STD)

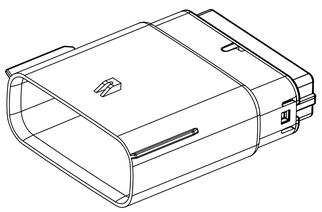

2X10 - UL V0*

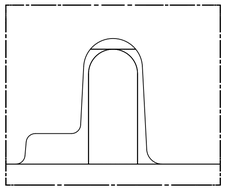

UL V0 UNIQUE FEATURE

Partial1

SCALE 10:1

* MINOR GEOMETRY CHANGE THAN STANDARD CONFIGURATION.

SEE NOTE 2a FOR MORE INFORMATION

FUNCTIONAL SYMBOLS			
FA = 0	DIMENSION UNITS: mm	SCALE: 1.5:1	
FC = 0	GENERAL TOLERANCES (UNLESS SPECIFIED)		
	ANGULAR TOL	±	1°
FP = 0	4 PLACES	±	
DIVISIONAL SYMBOLS	3 PLACES	±	
	2 PLACES	±	0.100
	1 PLACE	±	0.20
	0 PLACES	±	
	DRAFT WHERE APPLICABLE MUST REMAIN WITHIN DIMENSIONS		

THIS DRAWING CONTAINS INFORMATION THAT IS PROPRIETARY TO MOLEX ELECTRONIC TECHNOLOGIES, LLC AND SHOULD NOT BE USED WITHOUT WRITTEN PERMISSION

CURRENT REV DESC:

STATUS: Production

DRWN:	Yann Chen	2023-09-26
CHK'D:	Yu Chao Fu	2023-09-26
APPR:	Elvis Song	2023-09-27

THIRD ANGLE PROJECTION

DRAWING: A1-SIZE

SERIES: 33482

molex

MX150 BLADE
DUAL ROW SEALED ASSEMBLY

PRODUCT SALES DRAWING

DOCUMENT NUMBER	DOC TYPE	DOC PART	REVISION
SD-33482-0001	PSD	001	E3

MATERIAL NUMBER

CUSTOMER: GENERAL MARKET

SHEET NUMBER: 2 OF 11

SHEET DESCRIPTION
KEY CONFIGURATIONS

2X2

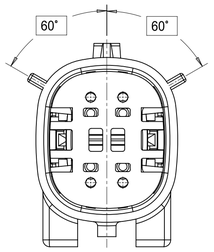

KEY A

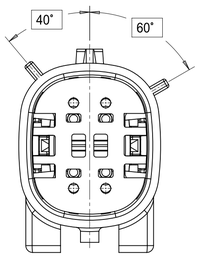

KEY B

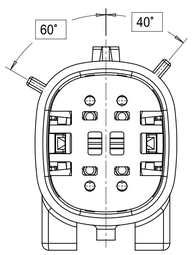

KEY C

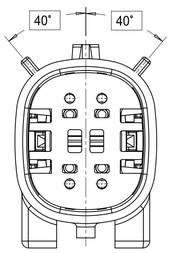

KEY D

2X3

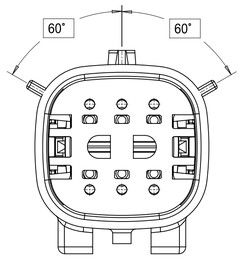

KEY A

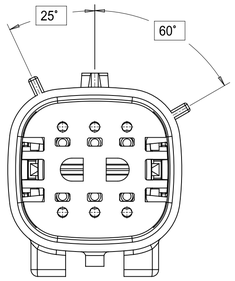

KEY B

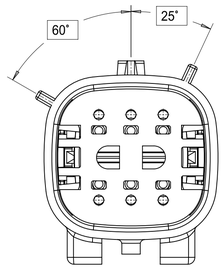

KEY C

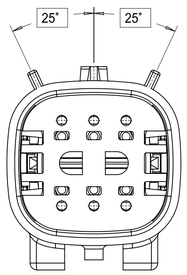

KEY D

2X4

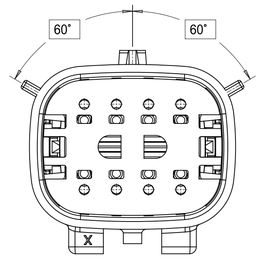

KEY A

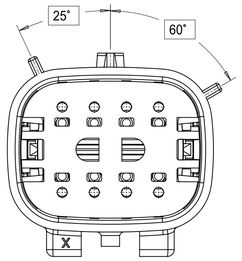

KEY B

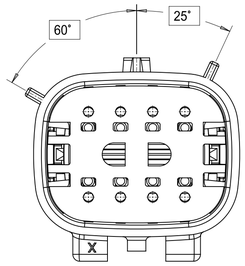

KEY C

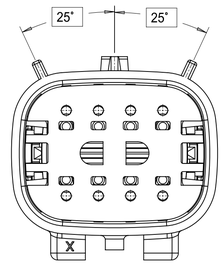

KEY D

THIS DRAWING CONTAINS INFORMATION THAT IS PROPRIETARY TO MOLEX ELECTRONIC TECHNOLOGIES, LLC AND SHOULD NOT BE USED WITHOUT WRITTEN PERMISSION

FUNCTIONAL SYMBOLS		DIMENSION UNITS	SCALE
F/A	= 0	mm	3:1
F/C	= 0	GENERAL TOLERANCES (UNLESS SPECIFIED)	
F/P	= 0	ANGULAR TOL	± 1°
DIVISIONAL SYMBOLS		4 PLACES	±
		3 PLACES	±
		2 PLACES	± 0.100
		1 PLACE	± 0.20
		0 PLACES	±
		DRAFT WHERE APPLICABLE MUST REMAIN WITHIN DIMENSIONS	

CURRENT REV DESC:

STATUS: Production
DRWN: Yann Chen 2023-09-26
CHK'D: Yu Chao Fu 2023-09-26
APPR: Elvis Song 2023-09-27

THIRD ANGLE PROJECTION | DRAWING: A1-SIZE | SERIES: 33482

molex

MX150 BLADE
DUAL ROW SEALED ASSEMBLY

PRODUCT SALES DRAWING

DOCUMENT NUMBER	DOC TYPE	DOC PART	REVISION
SD-33482-0001	PSD	001	E3

MATERIAL NUMBER	CUSTOMER	SHEET NUMBER
	GENERAL MARKET	3 OF 11

SHEET DESCRIPTION
KEY CONFIGURATIONS CONT.

2X6

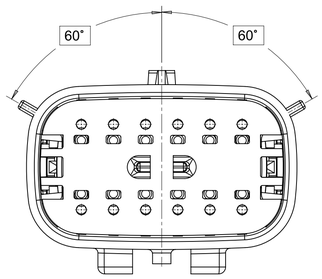

KEY A

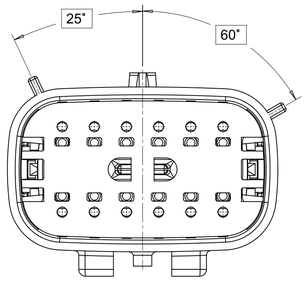

KEY B

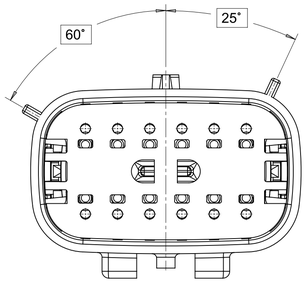

KEY C

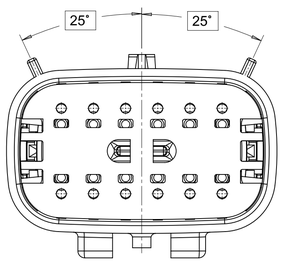

KEY D

2X8

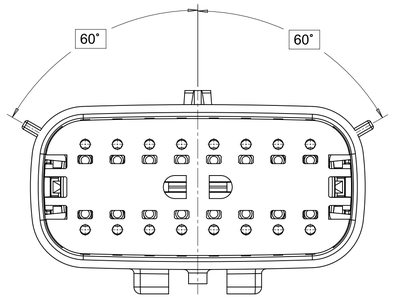

KEY A

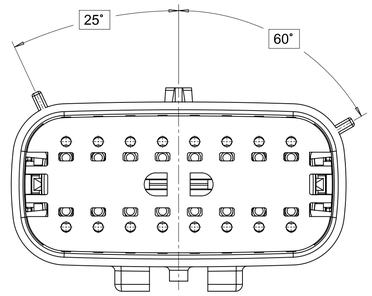

KEY B

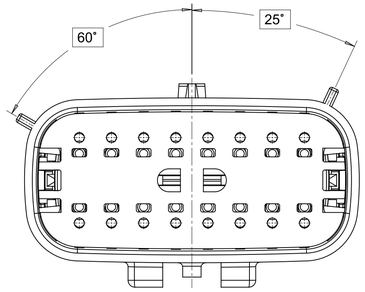

KEY C

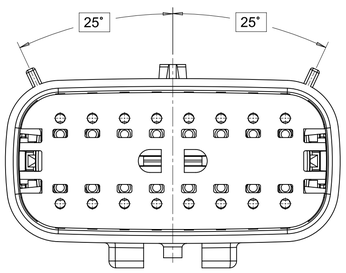

KEY D

2X10

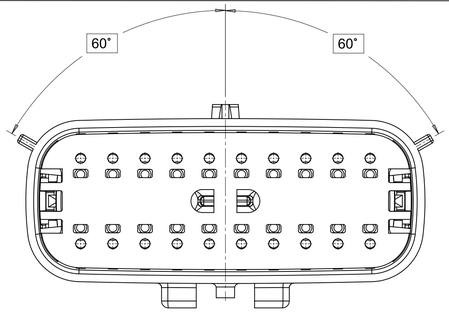

KEY A

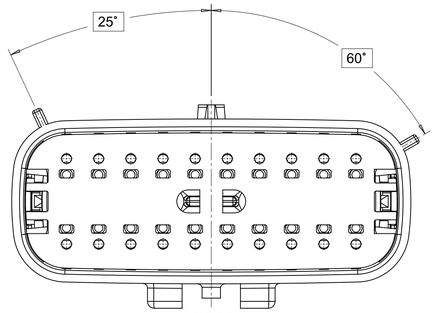

KEY B

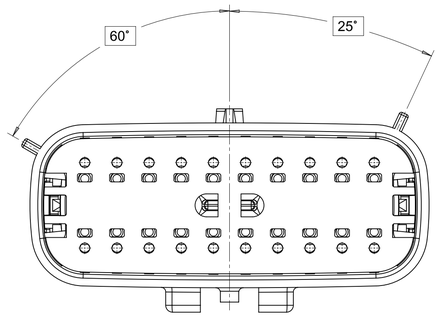

KEY C

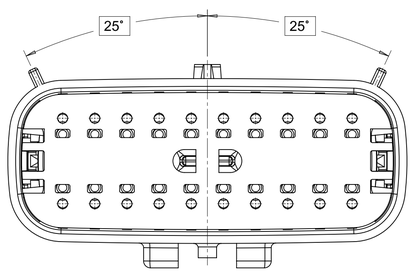

KEY D

THIS DRAWING CONTAINS INFORMATION THAT IS PROPRIETARY TO MOLEX ELECTRONIC TECHNOLOGIES, LLC AND SHOULD NOT BE USED WITHOUT WRITTEN PERMISSION

FUNCTIONAL SYMBOLS	
FA	= 0
FC	= 0
FD	= 0
DIVISIONAL SYMBOLS	

DIMENSION UNITS	SCALE
mm	3:1
GENERAL TOLERANCES (UNLESS SPECIFIED)	
ANGULAR TOL	± 1˚
4 PLACES	±
3 PLACES	±
2 PLACES	± 0.100
1 PLACE	± 0.20
0 PLACES	±
DRAFT WHERE APPLICABLE MUST REMAIN WITHIN DIMENSIONS	

CURRENT REV DESC:

STATUS:	Production	
DRWN:	Yann Chen	2023-09-26
CHK'D:	Yu Chao Fu	2023-09-26
APPR:	Elvis Song	2023-09-27

THIRD ANGLE PROJECTION

DRAWING	SERIES
A1-SIZE	33482

molex

MX150 BLADE
DUAL ROW SEALED ASSEMBLY

PRODUCT SALES DRAWING

DOCUMENT NUMBER	DOC TYPE	DOC PART	REVISION
SD-33482-0001	PSD	001	E3

MATERIAL NUMBER	CUSTOMER	SHEET NUMBER
	GENERAL MARKET	4 OF 11

FORMAT: TS-Engineer-A
REVISION: B
DATE: 2022/08/01

SHEET DESCRIPTION
BLADE SEALED ASSEMBLY

CHARTED DIMENSION					
DESCRIPTION	DIMENSIONS				
	A	B	C	D	E
2X2	15.54	1.75	24.40	54.45	22.23
2X3 STANDARD	19.04	3.50	26.21	54.45	22.23
2X3 LENGTHENED	19.04	3.50	26.21	56.45	22.23
2X4	22.54	1.75	27.21	54.45	22.23
2X6	29.54	1.75	32.27	54.45	22.23
2X8	36.54	1.75	38.88	54.45	22.23
2X10	43.64	1.75	45.65	54.45	22.05

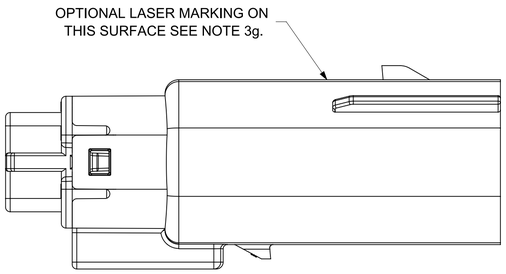

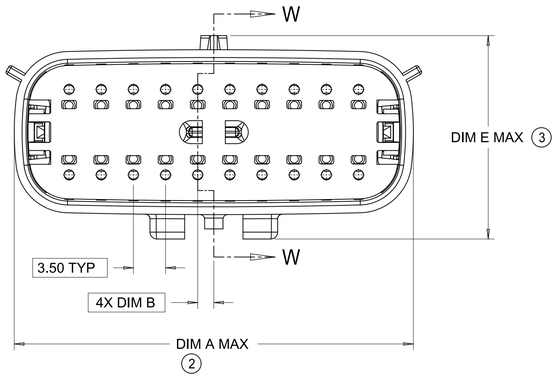

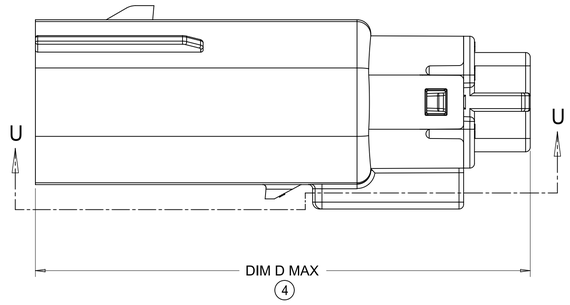

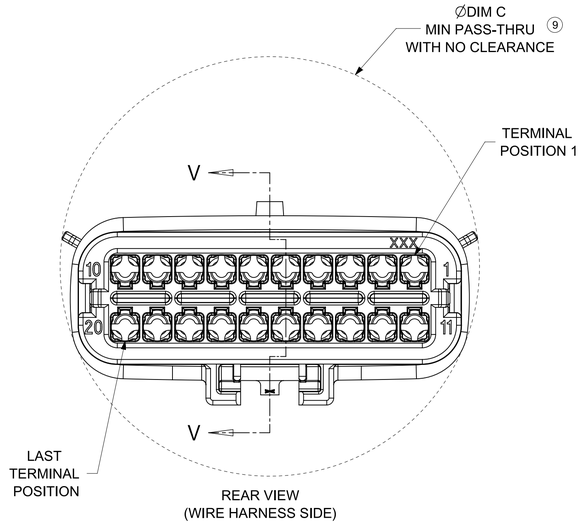

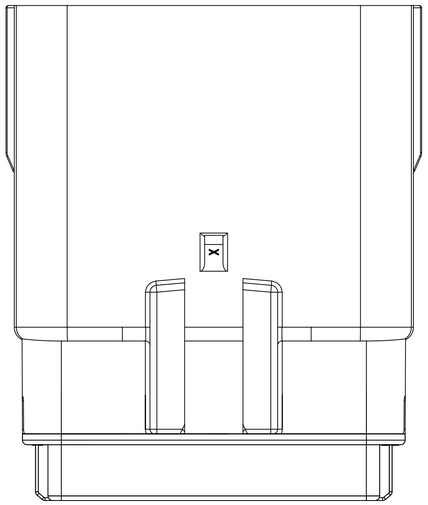

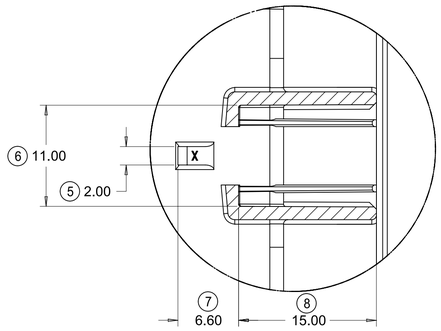

PartialU-U
SCALE 3:1

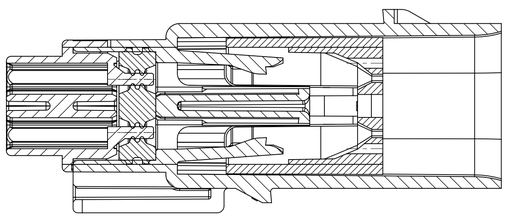

PRIMARY LOCK REINFORCEMENT (PLR) SHOWN
IN PRE-STAGED POSITION

SECTION W-W

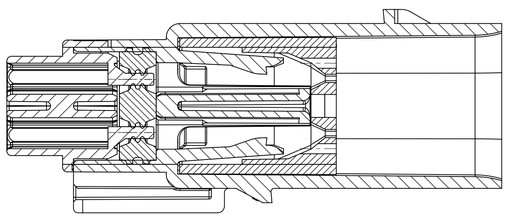

PRIMARY LOCK REINFORCEMENT (PLR) SHOWN
IN FINAL-LOCK POSITION

SECTION V-V

FUNCTIONAL SYMBOLS		
FA = 0	DIMENSION UNITS: mm	SCALE: 3:1
FC = 0	GENERAL TOLERANCES (UNLESS SPECIFIED)	
FP = 0	ANGULAR TOL	± 1°
DIVISIONAL SYMBOLS	4 PLACES	±
	3 PLACES	±
	2 PLACES	± 0.100
	1 PLACE	± 0.20
	0 PLACES	±
	DRAFT WHERE APPLICABLE MUST REMAIN WITHIN DIMENSIONS	

THIS DRAWING CONTAINS INFORMATION THAT IS PROPRIETARY TO MOLEX ELECTRONIC TECHNOLOGIES, LLC AND SHOULD NOT BE USED WITHOUT WRITTEN PERMISSION

CURRENT REV DESC:

STATUS: Production
DRWN: Yann Chen 2023-09-26
CHK'D: Yu Chao Fu 2023-09-26
APPR: Elvis Song 2023-09-27

THIRD ANGLE PROJECTION | DRAWING: A1-SIZE | SERIES: 33482

molex

MX150 BLADE
DUAL ROW SEALED ASSEMBLY

PRODUCT SALES DRAWING

DOCUMENT NUMBER	DOC TYPE	DOC PART	REVISION
SD-33482-0001	PSD	001	E3

MATERIAL NUMBER	CUSTOMER	SHEET NUMBER
	GENERAL MARKET	5 OF 11

FORMAT: TC-Engineer-A1
REVISION: B
DATE: 2022/04/01

SHEET DESCRIPTION
SYSTEM PACKAGING

CHARTED DIMENSION				
CKT	BLADE CONFIGURATION	RECEPTACLE CONFIGURATION	DIMENSIONS	
			K	L
2X2	STANDARD	W/O CLIPSLOT	72.78	28.00
		W/ CLIPSLOT	72.78	28.50
		LENGTHENED	77.21	28.00
2X3	STANDARD	W/O CLIPSLOT	72.78	28.00
		W/ CLIPSLOT		30.50
	LENGTHENED	W/O CLIPSLOT	74.79	28.00
		W/ CLIPSLOT		30.50
2X4	STANDARD	W/O CLIPSLOT	72.78	29.50
		W/ CLIPSLOT		31.50
2X6	STANDARD	W/O CLIPSLOT	72.79	35.58
		W/ CLIPSLOT		
2X8	STANDARD	W/O CLIPSLOT	72.67	42.25
		W/ CLIPSLOT		
2X10	STANDARD	STANDARD	72.78	49.05

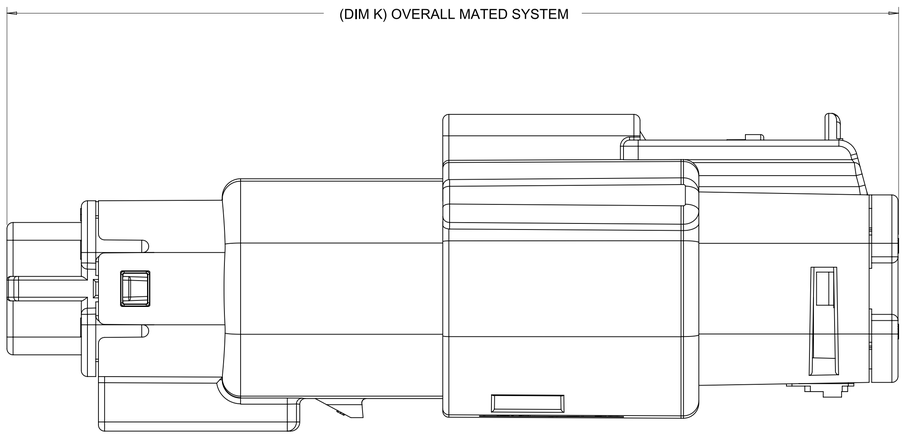

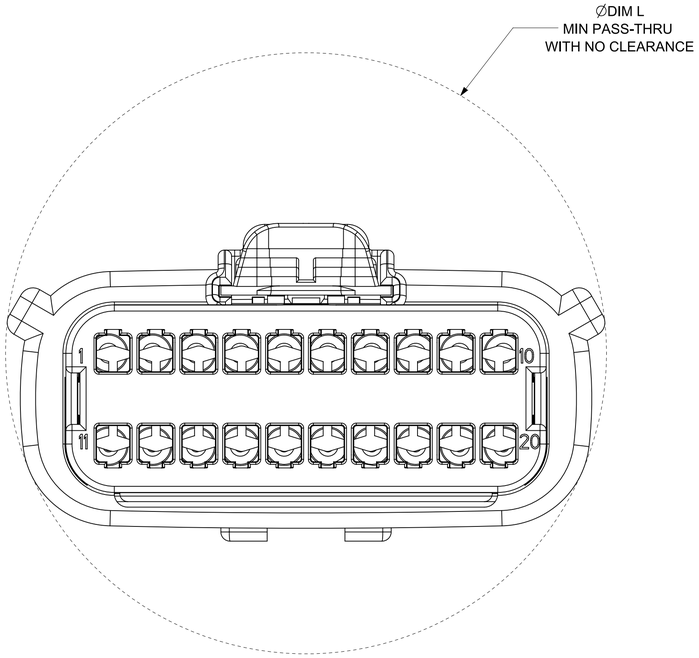

THIS DRAWING CONTAINS INFORMATION THAT IS PROPRIETARY TO MOLEX ELECTRONIC TECHNOLOGIES, LLC AND SHOULD NOT BE USED WITHOUT WRITTEN PERMISSION

FUNCTIONAL SYMBOLS
FA = 0
FC = 0
FP = 0

DIVISIONAL SYMBOLS

DIMENSION UNITS	SCALE
mm	4:1

GENERAL TOLERANCES (UNLESS SPECIFIED)	
ANGULAR TOL	± 1°
4 PLACES	±
3 PLACES	±
2 PLACES	± 0.100
1 PLACE	± 0.20
0 PLACES	±

DRAFT WHERE APPLICABLE MUST REMAIN WITHIN DIMENSIONS

CURRENT REV DESC:

STATUS: Production
DRWN: Yann Chen 2023-09-26
CHK'D: Yu Chao Fu 2023-09-26
APPR: Elvis Song 2023-09-27

THIRD ANGLE PROJECTION

DRAWING	SERIES
A1-SIZE	33482

molex

MX150 BLADE
DUAL ROW SEALED ASSEMBLY

PRODUCT SALES DRAWING

DOCUMENT NUMBER	DOC TYPE	DOC PART	REVISION
SD-33482-0001	PSD	001	E3

MATERIAL NUMBER	CUSTOMER	SHEET NUMBER
	GENERAL MARKET	6 OF 11

FORMAT TEMPLATE
REVISION: B
DATE: 2022/06/01

SHEET DESCRIPTION
BACKSHELL NOTES

BACKSHELL NOTES: VALID UNLESS OTHERWISE SPECIFIED

1. GENERAL:
a. APPLICATION SPECIFICATION SEE: AS-34951-001
- DESIGNED TO MATE WITH BLADE SEALED ASSEMBLY SPECIFIED IN MOLEX DRAWING SD-33482-0001.
- SYSTEM TO BE USED WITH WIRE WITHIN DIAMETER RANGE OF 1.2mm TO 2.69mm.
- COMPONENTS ARE OPTIONAL AND MUST BE PURCHASED SEPERATELY.
- DESIGN IS OWNED BY SCHLEMMER FOR SCHLEMMER BACKSHELL.
- DESIGN IS OWNED BY MOLEX FOR MOLEX BACKSHELL.
- 90˚ ADAPTOR DESIGN IS OWNED BY MOLEX.
- FOR ADDITIONAL INFORMATION SEE THE BACKSHELL COMPONENT DRAWING SD-34950-0001.

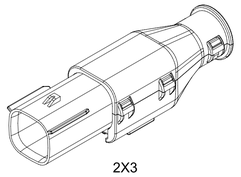

2X3

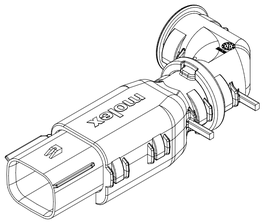

2X4

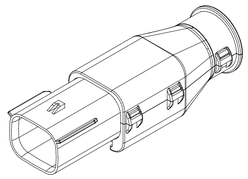

2X4

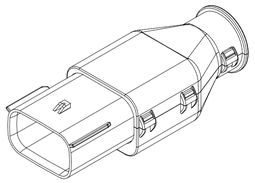

2X6

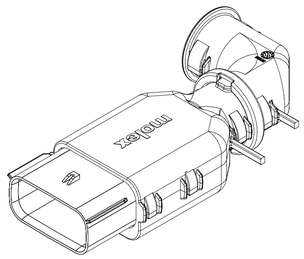

2X8

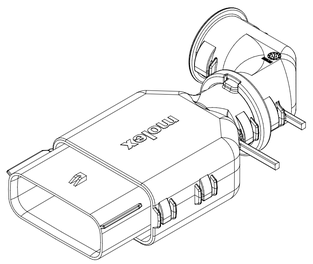

2X10

BACKSHELL CUSTOMER
MODEL NUMBER LEGEND

34950-XXXX

CUSTOMER MODEL COMPONENTS
- 0 - SCHLEMMER BACKSHELL ONLY
- 1 - SCHLEMMER BACKSHELL & MX150 HOUSING KEY A ASSEMBLY
- 2 - SCHLEMMER BACKSHELL & MX150 HOUSING KEY B ASSEMBLY
- 3 - SCHLEMMER BACKSHELL & MX150 HOUSING KEY C ASSEMBLY
- 4 - SCHLEMMER BACKSHELL & MX150 HOUSING KEY D ASSEMBLY
- 5 - MOLEX BACKSHELL ONLY
- 6 - MOLEX BACKSHELL & MX150 HOUSING KEY A ASSEMBLY
- 7 - MOLEX BACKSHELL & MX150 HOUSING KEY B ASSEMBLY
- 8 - MOLEX BACKSHELL & MX150 HOUSING KEY C ASSEMBLY
- 9 - MOLEX BACKSHELL & MX150 HOUSING KEY D ASSEMBLY

BACKSHELL FEATURES
- 1 - WITH RIBS
- 2 - WITHOUT RIBS
- 3 - 90˚ ADAPTOR

MX150 CIRCUIT SIZE 04, 06, 08, 12, 16, 20

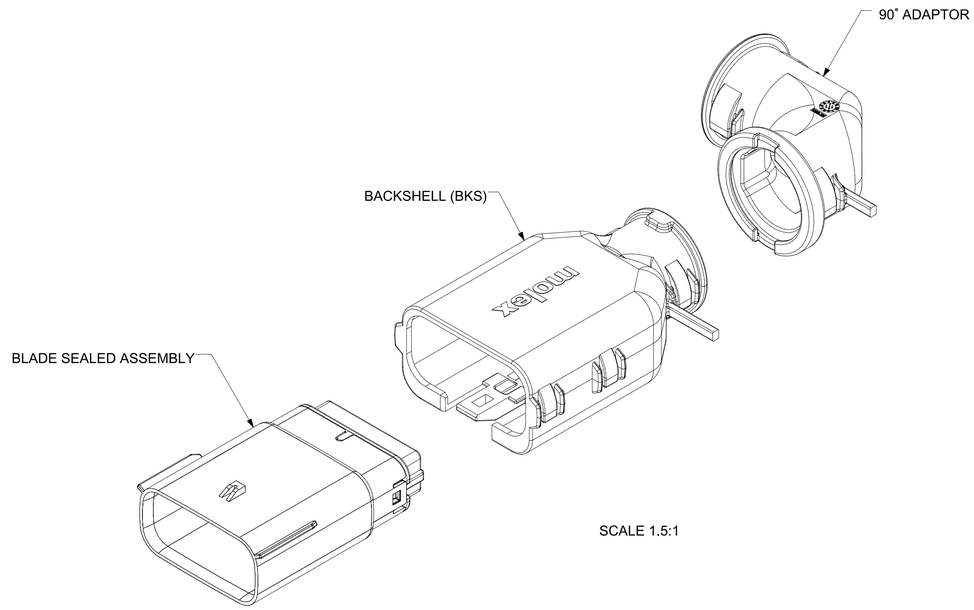

SCALE 1.5:1

THIS DRAWING CONTAINS INFORMATION THAT IS PROPRIETARY TO MOLEX ELECTRONIC TECHNOLOGIES, LLC AND SHOULD NOT BE USED WITHOUT WRITTEN PERMISSION

FUNCTIONAL SYMBOLS	DIMENSION UNITS	SCALE
F A = 0	mm	1.5:1
F C = 0	GENERAL TOLERANCES (UNLESS SPECIFIED)	
F P = 0	ANGULAR TOL	± 1˚
DIVISIONAL SYMBOLS	4 PLACES	±
	3 PLACES	±
	2 PLACES	± 0.100
	1 PLACE	± 0.20
	0 PLACES	±
	DRAFT WHERE APPLICABLE MUST REMAIN WITHIN DIMENSIONS	

CURRENT REV DESC:

STATUS: Production
DRWN: Yann Chen 2023-09-26
CHK'D: Yu Chao Fu 2023-09-26
APPR: Elvis Song 2023-09-27

THIRD ANGLE PROJECTION

DRAWING	SERIES
A1-SIZE	33482

molex

MX150 BLADE
DUAL ROW SEALED ASSEMBLY

PRODUCT SALES DRAWING

DOCUMENT NUMBER	DOC TYPE	DOC PART	REVISION
SD-33482-0001	PSD	001	E3

MATERIAL NUMBER	CUSTOMER	SHEET NUMBER
	GENERAL MARKET	7 OF 11

FORMAT: 12.dwg(sheet)A1
REVISION: B
DATE: 2022/04/01

SHEET DESCRIPTION
SCHLEMMER BACKSHELL

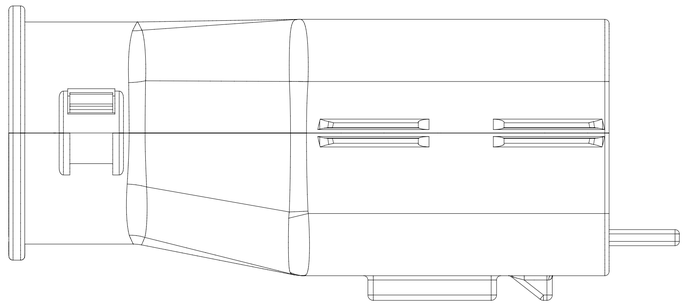

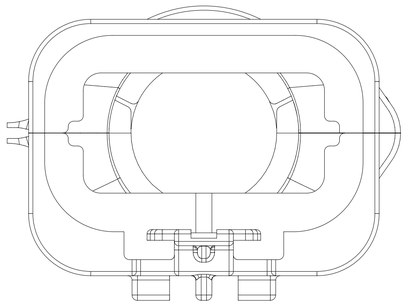

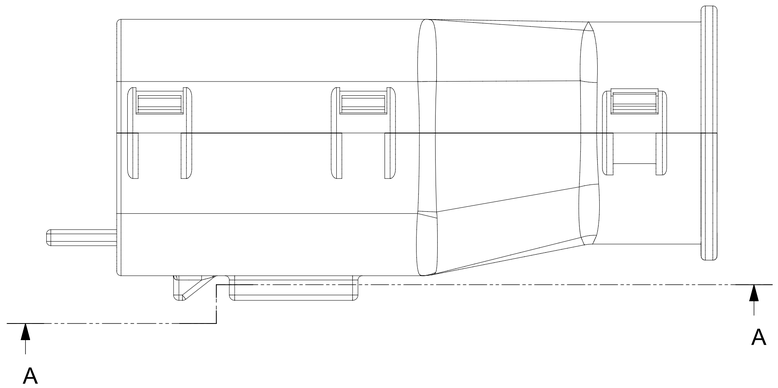

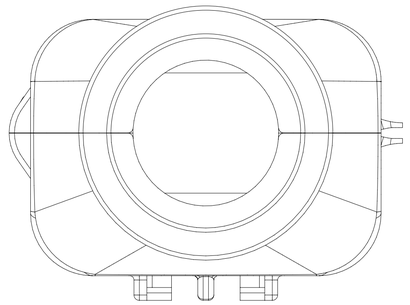

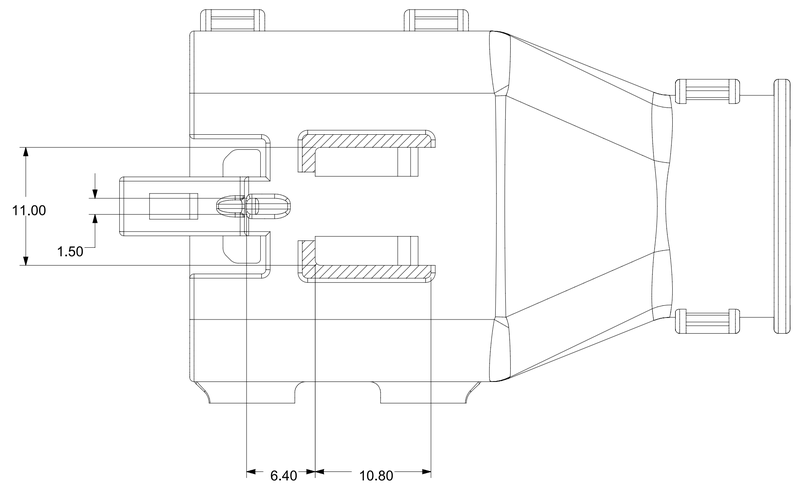

SECTION A-A

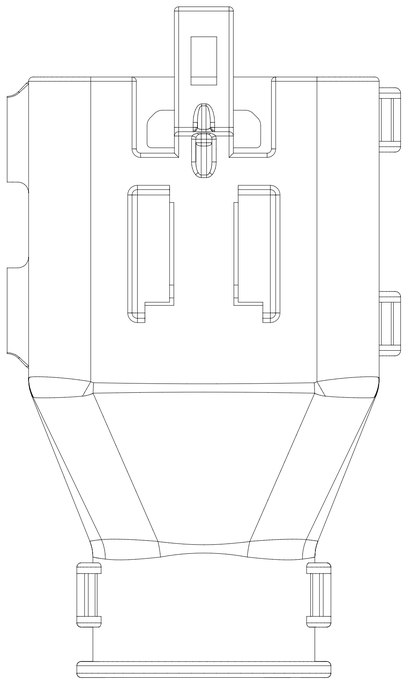

THIS DRAWING CONTAINS INFORMATION THAT IS PROPRIETARY TO MOLEX ELECTRONIC TECHNOLOGIES, LLC AND SHOULD NOT BE USED WITHOUT WRITTEN PERMISSION

FUNCTIONAL SYMBOLS	DIMENSION UNITS	SCALE
F/A = 0	mm	3.5:1
F/C = 0	GENERAL TOLERANCES (UNLESS SPECIFIED)	
F/P = 0	ANGULAR TOL ± 1°	
	4 PLACES	±
DIVISIONAL SYMBOLS	3 PLACES	±
	2 PLACES	± 0.100
	1 PLACE	± 0.20
	0 PLACES	±
	DRAFT WHERE APPLICABLE MUST REMAIN WITHIN DIMENSIONS	

CURRENT REV DESC:

STATUS: Production
DRWN: Yann Chen 2023-09-26
CHK'D: Yu Chao Fu 2023-09-26
APPR: Elvis Song 2023-09-27

THIRD ANGLE PROJECTION

DRAWING	SERIES
A1-SIZE	33482

molex

MX150 BLADE
DUAL ROW SEALED ASSEMBLY

PRODUCT SALES DRAWING

DOCUMENT NUMBER	DOC TYPE	DOC PART	REVISION
SD-33482-0001	PSD	001	E3

MATERIAL NUMBER	CUSTOMER	SHEET NUMBER
	GENERAL MARKET	8 OF 11

SHEET DESCRIPTION
MOLEX BACKSHELL

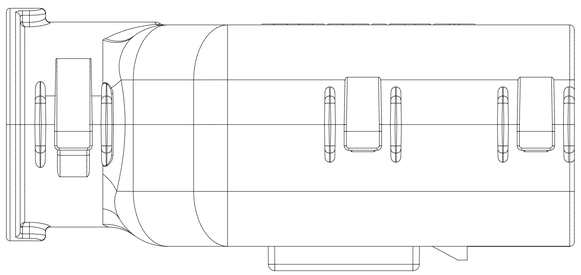

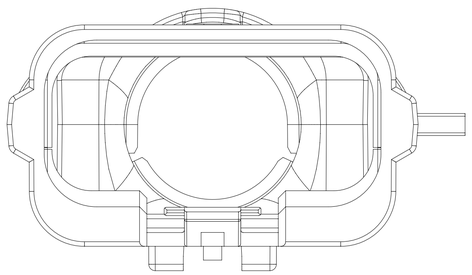

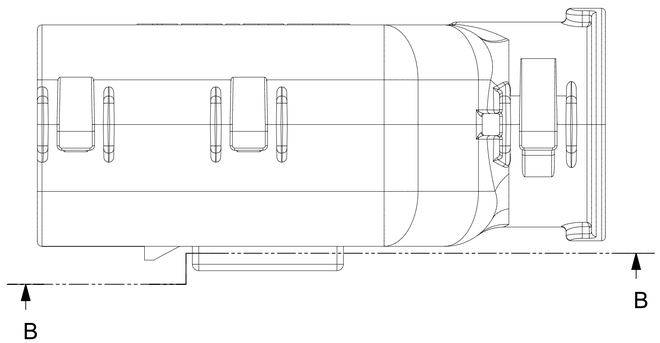

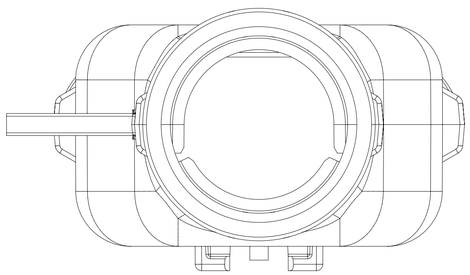

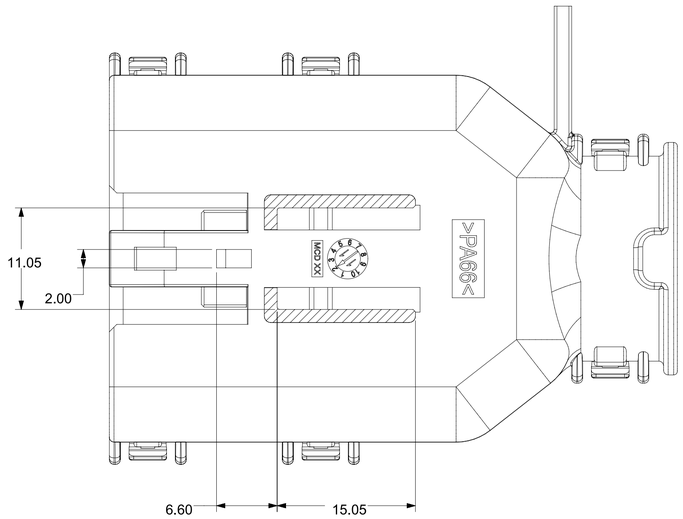

SECTION B-B

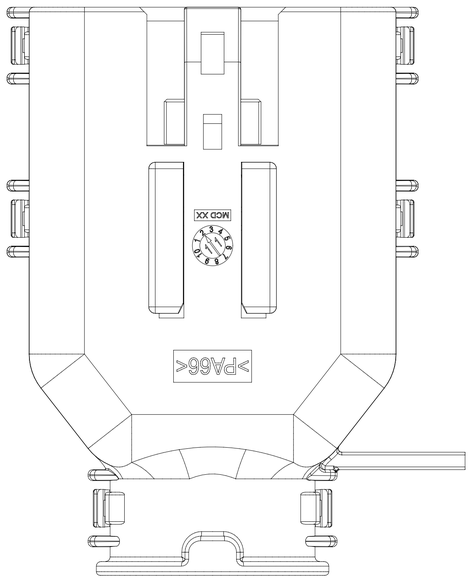

FUNCTIONAL SYMBOLS	THIS DRAWING CONTAINS INFORMATION THAT IS PROPRIETARY TO MOLEX ELECTRONIC TECHNOLOGIES, LLC AND SHOULD NOT BE USED WITHOUT WRITTEN PERMISSION			
= 0	DIMENSION UNITS: mm	SCALE: 3:1	CURRENT REV DESC:	molex
= 0	GENERAL TOLERANCES (UNLESS SPECIFIED)			MX150 BLADE DUAL ROW SEALED ASSEMBLY
= 0	ANGULAR TOL ± 1°			
	4 PLACES ±			PRODUCT SALES DRAWING
DIVISIONAL SYMBOLS	3 PLACES ±		STATUS: Production	
	2 PLACES ± 0.100		DRWN: Yann Chen 2023-09-26	DOCUMENT NUMBER: SD-33482-0001 / DOC TYPE: PSD / DOC PART: 001 / REVISION: E3
	1 PLACE ± 0.20		CHK'D: Yu Chao Fu 2023-09-26	
	0 PLACES ±		APPR: Elvis Song 2023-09-27	
	DRAFT WHERE APPLICABLE MUST REMAIN WITHIN DIMENSIONS	THIRD ANGLE PROJECTION	DRAWING: A1-SIZE / SERIES: 33482	MATERIAL NUMBER / CUSTOMER: GENERAL MARKET / SHEET NUMBER: 9 OF 11

FORMAT TC/engineA1
REVISION: B
DATE: 2020/06/01

SHEET DESCRIPTION
SCHLEMMER BACKSHELL CONFIGURATIONS

CHARTED DIMENSIONS

CKT	BLADE CONFIGURATION	RECEPTACLE CONFIGURATION	DIMENSIONS				
			M	N	P	R	T
2X3	STANDARD	STANDARD	106.83	32.75	31.75	29.00	29.50
	LENGTHENED		108.71				
2X4	STANDARD	STANDARD	106.83	33.50	31.90	30.70	30.70
2X6	STANDARD	STANDARD	106.83	37.84	37.27	35.83	36.83

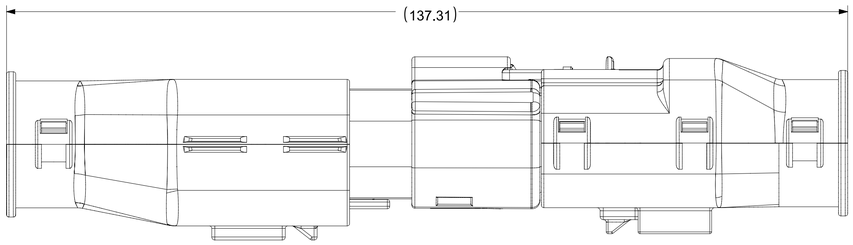

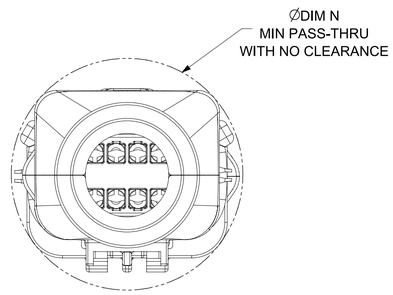

OVERALL MATED SYSTEM WITH BLADE AND RECEPTACLE BACKSHELL

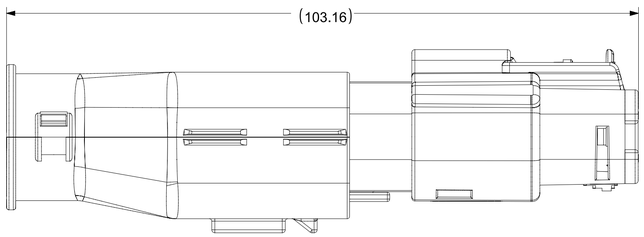

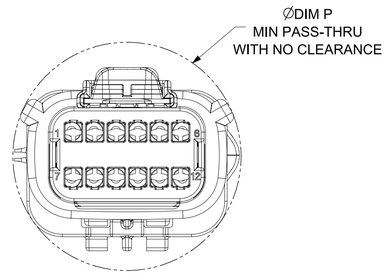

OVERALL MATED SYSTEM WITH BLADE BACKSHELL

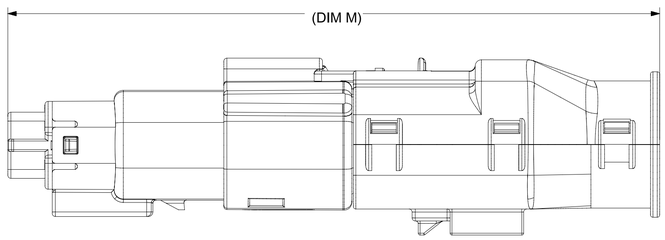

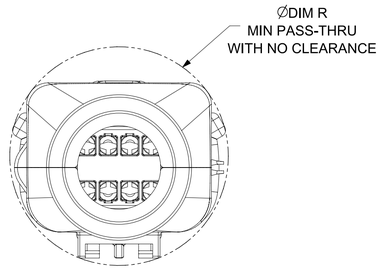

OVERALL MATED SYSTEM WITH RECEPTACLE BACKSHELL

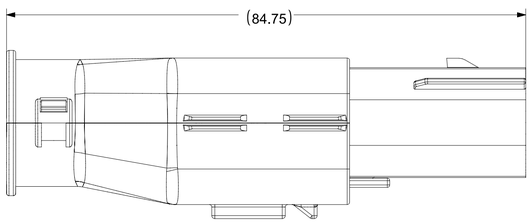

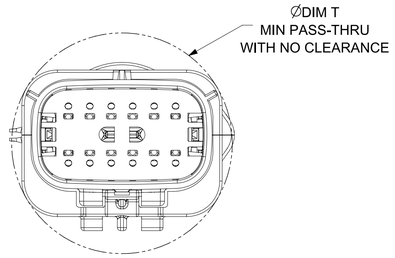

BLADE SEALED ASSEMBLY WITH BLADE BACKSHELL

FUNCTIONAL SYMBOLS	DIMENSION UNITS	SCALE
F A = 0	mm	2:1
F C = 0	GENERAL TOLERANCES (UNLESS SPECIFIED)	
F D = 0	ANGULAR TOL	± 1°
DIVISIONAL SYMBOLS	4 PLACES	±
	3 PLACES	±
	2 PLACES	± 0.100
	1 PLACE	± 0.20
	0 PLACES	±
	DRAFT WHERE APPLICABLE MUST REMAIN WITHIN DIMENSIONS	

THIS DRAWING CONTAINS INFORMATION THAT IS PROPRIETARY TO MOLEX ELECTRONIC TECHNOLOGIES, LLC AND SHOULD NOT BE USED WITHOUT WRITTEN PERMISSION

CURRENT REV DESC:

STATUS: Production
DRWN: Yann Chen 2023-09-26
CHK'D: Yu Chao Fu 2023-09-26
APPR: Elvis Song 2023-09-27

THIRD ANGLE PROJECTION | DRAWING: A1-SIZE | SERIES: 33482

molex

MX150 BLADE
DUAL ROW SEALED ASSEMBLY

PRODUCT SALES DRAWING

DOCUMENT NUMBER	DOC TYPE	DOC PART	REVISION
SD-33482-0001	PSD	001	E3

MATERIAL NUMBER | CUSTOMER: GENERAL MARKET | SHEET NUMBER: 10 OF 11

FORMAT: TCdynamic4
DATE: 2023-09-27
DATE: 2023/09/27

SHEET DESCRIPTION
MOLEX BACKSHELL CONFIGURATIONS

OVERALL MATED SYSTEM WITH BLADE AND RECEPTACLE BACKSHELL

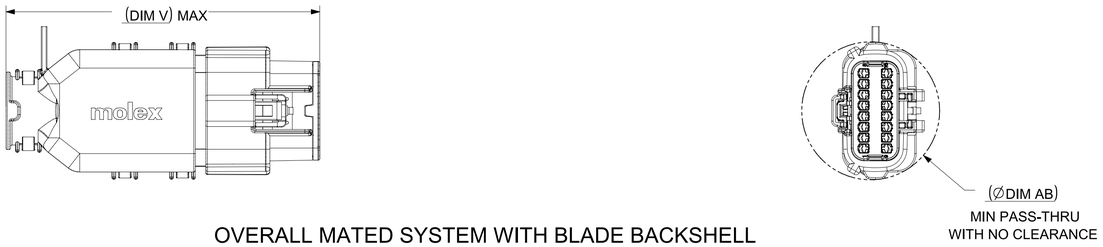

OVERALL MATED SYSTEM WITH BLADE BACKSHELL

OVERALL MATED SYSTEM WITH RECEPTACLE BACKSHELL

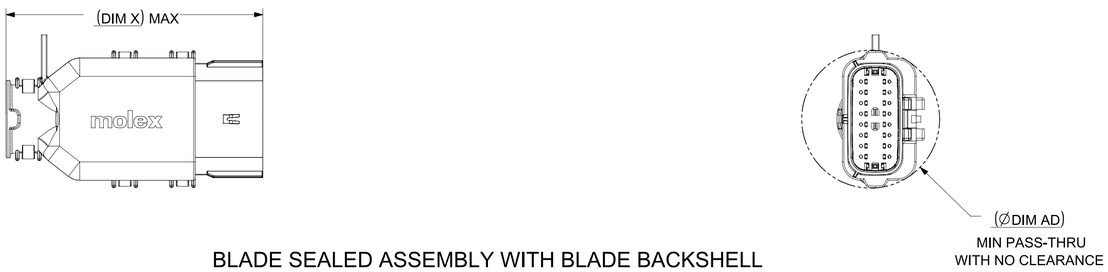

BLADE SEALED ASSEMBLY WITH BLADE BACKSHELL

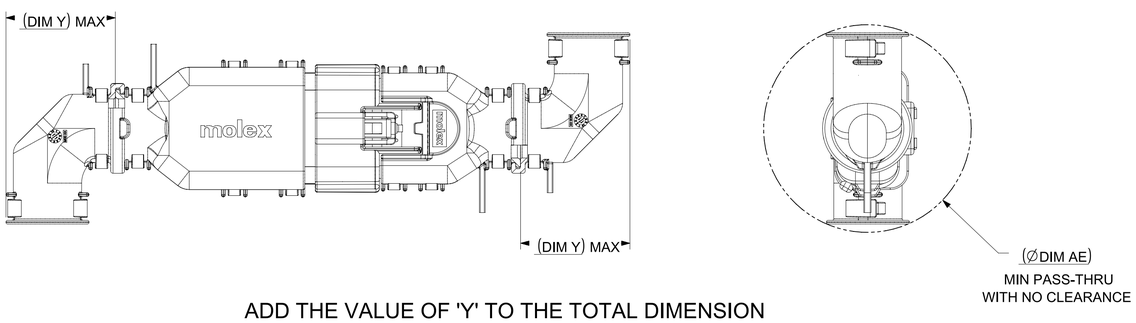

ADD THE VALUE OF 'Y' TO THE TOTAL DIMENSION
WHENEVER ADAPTOR IS USED

CHARTED DIMENSIONS

CKT	BLADE CONFIGURATION	RECEPTACLE CONFIGURATION	DIMENSIONS									
			U	V	W	X	Y	AA	AB	AC	AD	AE
2X4	STANDARD	STANDARD	115.24	94.36	93.93	75.62	32.10	32.93	32.54	32.85	31.76	56.81
2X8	STANDARD	STANDARD	132.49	102.81	102.73	84.07	36.10	45.44	45.44	42.65	45.44	68.18
2X10	STANDARD	STANDARD	132.49	102.81	102.73	84.07	36.10	45.44	45.44	42.65	45.44	68.18

THIS DRAWING CONTAINS INFORMATION THAT IS PROPRIETARY TO MOLEX ELECTRONIC TECHNOLOGIES, LLC AND SHOULD NOT BE USED WITHOUT WRITTEN PERMISSION

FUNCTIONAL SYMBOLS: FA = 0, FC = 0, FP = 0

DIVISIONAL SYMBOLS

DIMENSION UNITS	SCALE
mm	1:1

GENERAL TOLERANCES (UNLESS SPECIFIED)	
ANGULAR TOL	± 1°
4 PLACES	±
3 PLACES	±
2 PLACES	± 0.100
1 PLACE	± 0.20
0 PLACES	±

DRAFT WHERE APPLICABLE MUST REMAIN WITHIN DIMENSIONS

CURRENT REV DESC:

STATUS: Production
DRWN: Yann Chen 2023-09-26
CHK'D: Yu Chao Fu 2023-09-26
APPR: Elvis Song 2023-09-27

THIRD ANGLE PROJECTION

DRAWING: A1-SIZE
SERIES: 33482

molex

MX150 BLADE
DUAL ROW SEALED ASSEMBLY

PRODUCT SALES DRAWING

DOCUMENT NUMBER	DOC TYPE	DOC PART	REVISION
SD-33482-0001	PSD	001	E3

MATERIAL NUMBER	CUSTOMER	SHEET NUMBER
	GENERAL MARKET	11 OF 11