used for: D-SUB

9pos. (c)

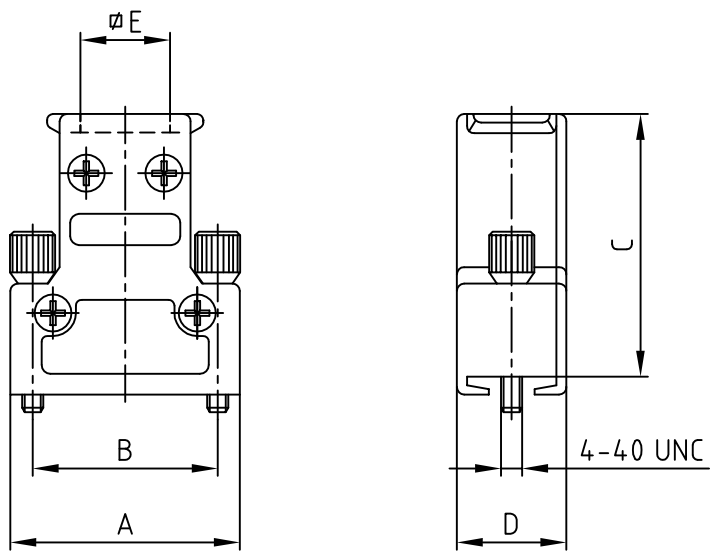

15pos. (c)

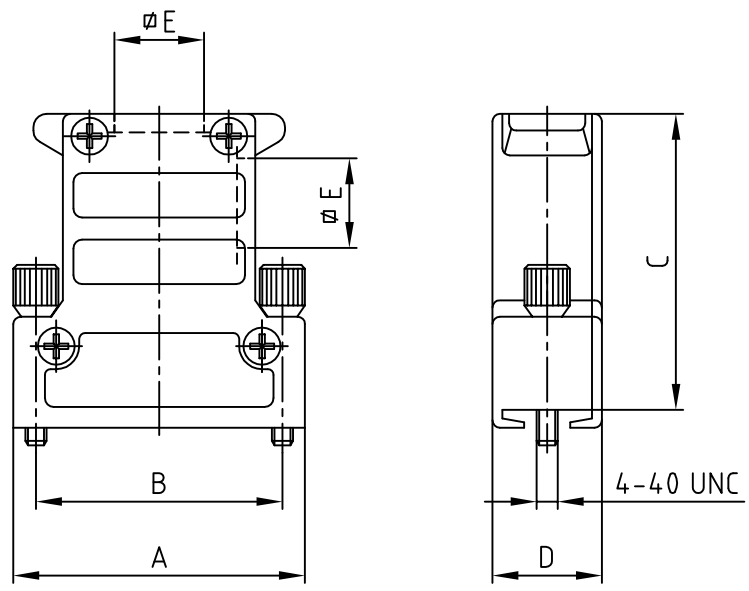

25-50pos. (c)

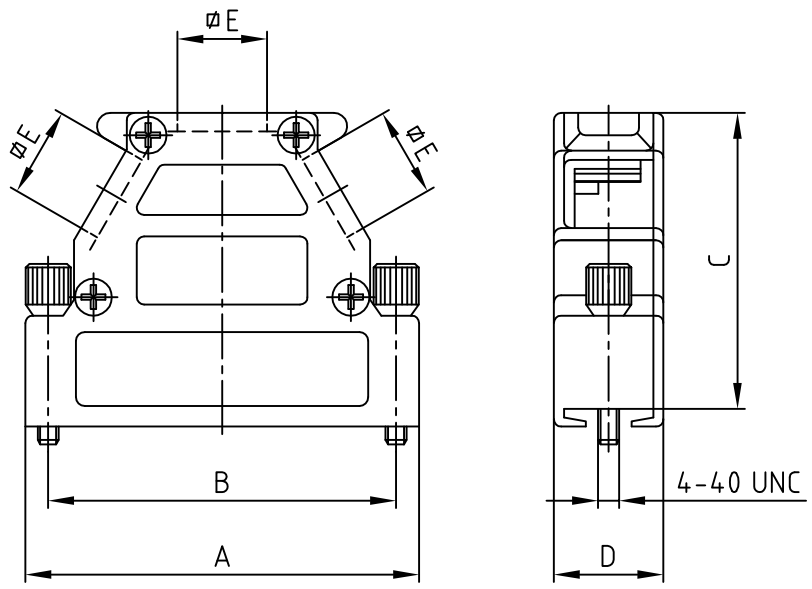

No. of pos.	A (d)	B (d)	C (d)	D (d)	ØE	Part No. Bulk package	Part No. Single package (c)
9	31.0	25.0	35.5	14.8	12.1	165X11609X	165X11609XE
15	39.4	33.3	40.0	14.8	12.1	165X11619X	165X11619XE
25	53.2	47.0	40.0	14.8	12.1	165X11629X	165X11629XE
37	69.6	63.5	40.0	14.8	12.1	165X11639X	165X11639XE
50	67.0	61.1	42.0	17.6	14.6	165X11649X	165X11649XE

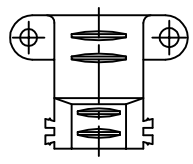

(b)

Cable clamp has to be ordered seperatly.
9-37 pos. Part-no. 160X11189X
50 pos. Part-no. 160X11199X

(e) Delivery includes:
Hood with covers
Blanking plug:
- 9pos.: without blanking plug
- 15pos.: with 1 blanking plug
- 25-50pos.: with 2 blanking plugs
4 screws for fixing
1 earth screw
2 jack screws

Directive 2002/95/EC RoHS compliant

THIS DRAWING MAY NOT BE COPIED OR REPRODUCED IN ANY WAY, AND MAY NOT BE PASSED ON TO A THIRD PARTY WITHOUT WRITTEN PERMISSION. OWNERSHIP AND COPYRIGHT OF CONEC GmbH
DO NOT ALTER CAD DRAWING BY HAND

rev.	description	date	name
1 x e	Ä 4037	06.07.11	Lehmen.
4 x d	Ä 3657	18.05.10	Lehmen.
4 x c	Ä 2754	23.07.07	Lehmen.
1 x b	Ä 2459	13.03.06	HS
a	Original		

tolerance — dim. in mm

	date	name
2002		
drawn	29.01.	Parei
appd.	30.01.	E. Mickenbecker
norm		
d-old		

CONEC®

scale: 1:1
material: HOOD WITH COVER: DIE-CAST ZINC
title: METAL HOOD
EMI/RFI SHIELDING
9-50pos. with jack screws 4-40 UNC
dwg no: 16K1A462A
DIN-A 3
sh: 1/1
part no: SEE TABLE

Downloaded from Arrow.com.