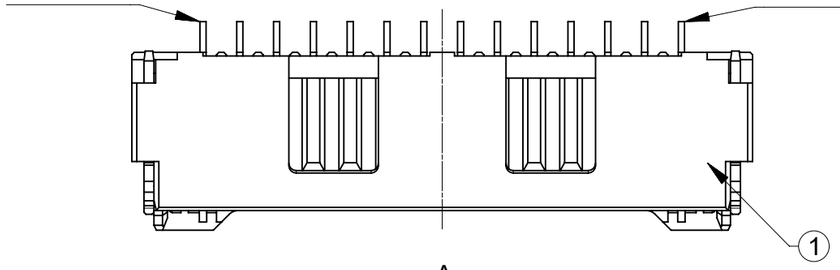

NOTES

1. 端子テール部及びネイルの平坦度： 0.1 MAX.
   TAIL AND NAIL COPLANARITY: 0.1 MAX.
2. 極数 = 偶数 に適用
   APPLY FOR CIRCUIT SIZE = EVEN
3. 関連製品、書類はSHEET 4参照のこと
   PLEASE REFER TO SHEET 4 TABLE ABOUT RELATED PRODUCTS AND DOCUMENTS

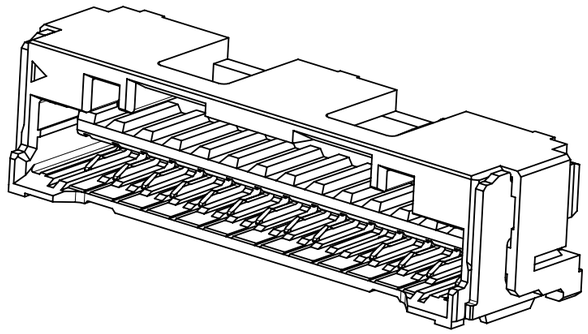

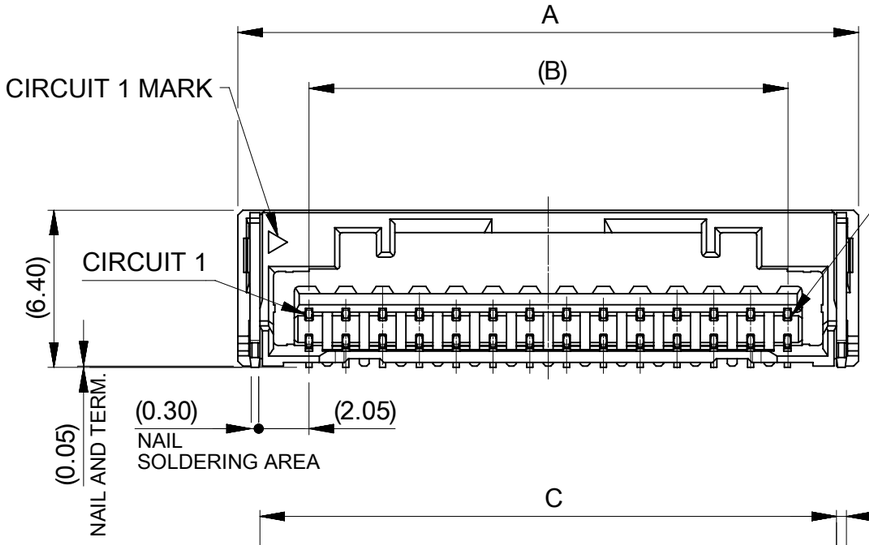

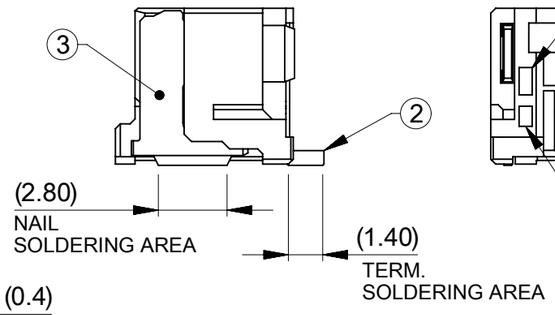

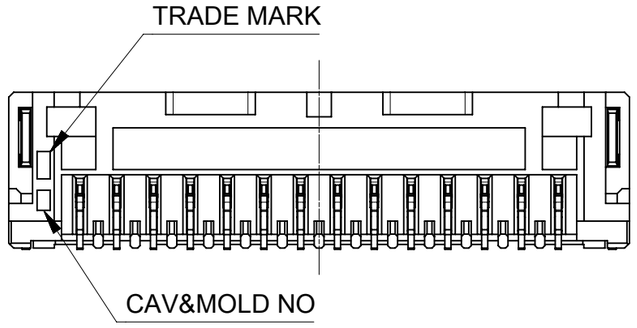

4 オーダー番号(製品番号):SHEET 5の製品一覧を参照ください
ORDER NO (PRODUCT NO) : REFER TO SHEET 5
FOR PRODUCT LIST

213226 * * * *

- 213226: シリーズ番号 / SERIES NO
- 1st *: 極数 / CIRCUIT SIZE
- 2nd *: 金めっき厚 / GOLD PLATING THICKNESS
- 3rd *: 色 / COLOR

CIRCUIT	No.	GOLD THK [micro-meter]	No.	COLOR
02 ~ 15	1	0.1	0	ナチュラル NATURAL
	3	0.38	1	黒 BLACK
	7	0.76		

C		B		A		極数 CKT.NO.
25	±0.25	21	±0.25	26.8	±0.25	15
23.5		19.5		25.3		14
22		18		23.8		13
20.5		16.5		22.3		12
19		15		20.8		11
17.5		13.5		19.3		10
16		12		17.8		9
14.5		10.5		16.3		8
13		9	(±0.2)	14.8		7
11.5		7.5		13.3		6
10		6		11.8		5
8.5	(±0.2)	4.5		10.3		4
7		3		8.8	(±0.2)	3
5.5		1.5		7.3		2

番号 NO.	部品 PART	材質 MATERIAL	
①	ハウジング HOUSING	ポリアミド(PA) UL94V-0 色：SEE CHART POLYAMIDE(PA) UL94V-0 COLOR : SEE CHART	
②	ターミナル TERMINAL	銅合金 COPPER ALLOY	
		コンタクト部 CONTACT AREA	金めっき：製品一覧参照 GOLD PLATING：SEE PRODUCT LIST
		テール部 TAIL AREA	無光沢錫めっき：1.0 micro-meter MIN MATTE TIN PLATING：1.0 micro-meter MIN
		下地めっき(全面) UNDER PLATING (WHOLE SURFACE)	ニッケルめっき：1.0 micro-meter MIN NICKEL PLATING ：1.0 micro-meter MIN
③	ネイル NAIL	黄銅 BRASS	
		無光沢錫めっき ： 1.0 micro-meter MIN MATTE TIN PLATING	
		ニッケルめっき(下地)：1.0 micro-meter MIN NICKEL PLATING (UNDER PLATING)	

DOCUMENT STATUS	P1	RELEASE DATE	2023/06/23 10:36:42

THIS DRAWING CONTAINS INFORMATION THAT IS PROPRIETARY TO MOLEX ELECTRONIC TECHNOLOGIES, LLC AND SHOULD NOT BE USED WITHOUT WRITTEN PERMISSION

DIMENSION UNITS	SCALE
mm	NTS

GENERAL TOLERANCES (UNLESS SPECIFIED)

ANGULAR TOL	±	3.0 °
4 PLACES	±	0.2
3 PLACES	±	0.2
2 PLACES	±	0.2
1 PLACE	±	0.2
0 PLACES	±	0.2

DRAFT WHERE APPLICABLE MUST REMAIN WITHIN DIMENSIONS

CURRENT REV DESC:

EC NO: 742719
DRWN: MIKEDA01 2023/06/23
CHK'D: SAKIYAMA 2023/06/23
APPR: AIDA 2023/06/23

INITIAL REVISION:
DRWN: MIKEDA01 2019/10/01
APPR: KOMURAKAMI 2019/11/20

THIRD ANGLE PROJECTION | DRAWING: A3-SIZE | SERIES: 213226

molex

CLIK-MATE 1.5
SINGLE ROW SMT R/A TYPE REC ASSY GOLD PLATING

PRODUCT CUSTOMER DRAWING

DOCUMENT NUMBER	DOC TYPE	DOC PART	REVISION
2132260000-SD	PSD	000	E

MATERIAL NUMBER	CUSTOMER	SHEET NUMBER
	GENERAL	1 OF 5

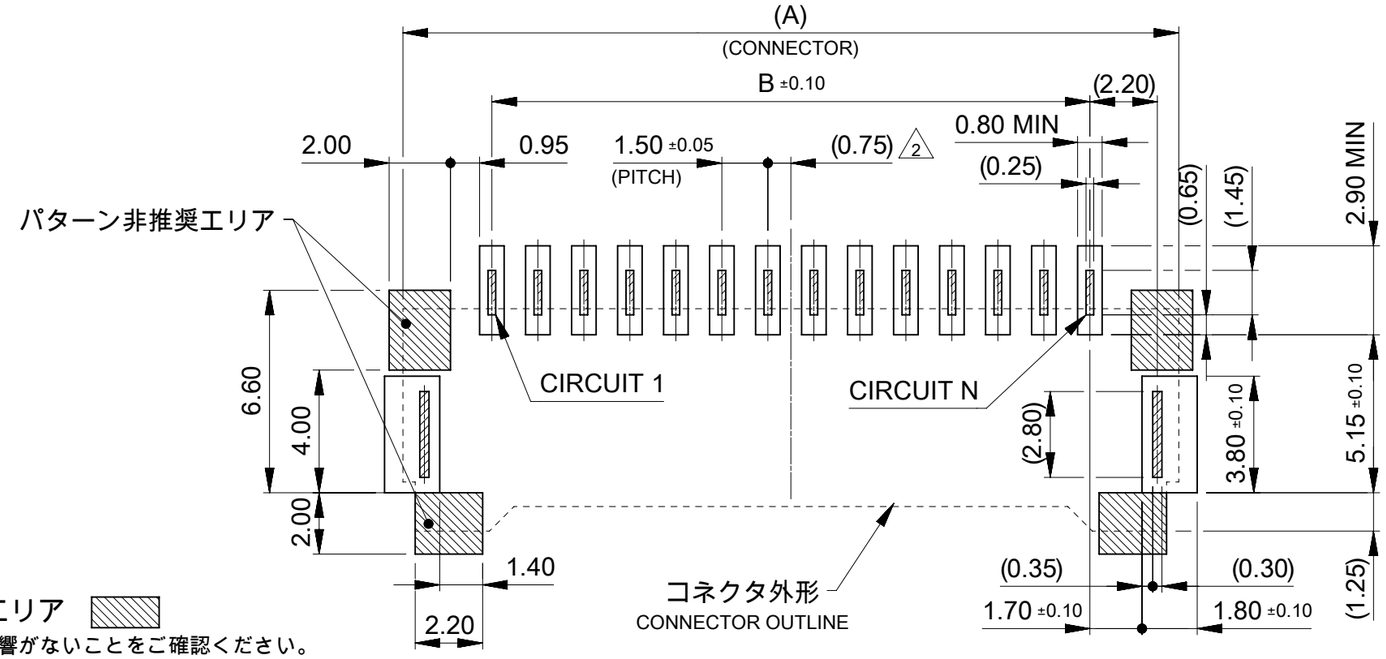

パターン非推奨エリア

パターンを引き回す際は、製品機能に影響がないことをご確認ください。
PATTERN IS NOT RECCOMENDED ON THE HATCHED AREA.
PLEASE CHECK NOT TO HAVE PROBLEM FOR PRODUCT FUNCTION
WHEN SETTING PATTERN ON THE HATCHED AREA.

基板パターンレイアウト(参考)

RECCOMENDED PCB PATTERN LAYOUT (REF.)
(参考：メタルマスク厚さ 0.10mm, マスク開口率100%)
(REF:METAL MASK THICKNESS 0.10mm, APERTURE RATIO 100%)

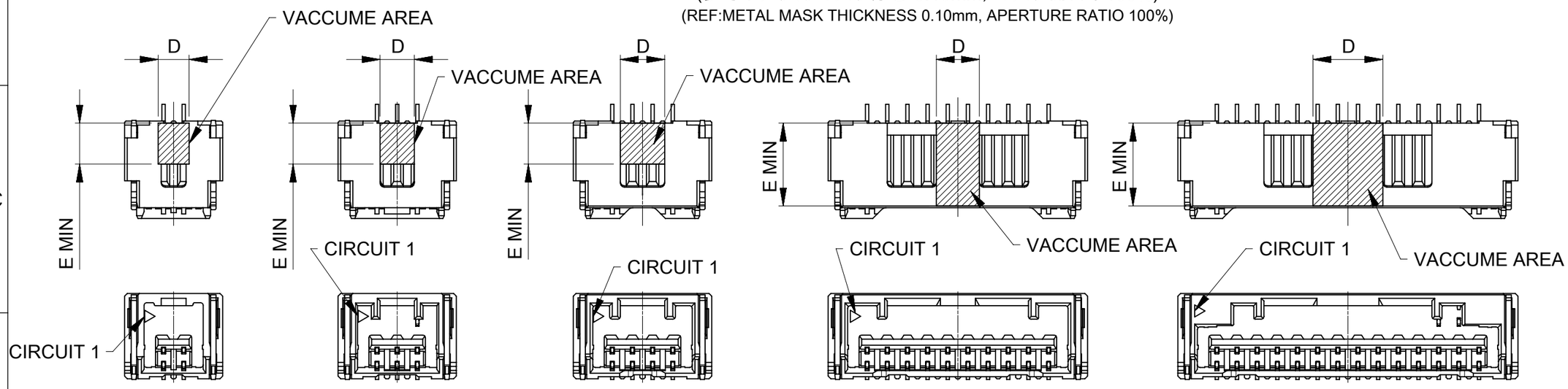

2極
2 CIRCUITS

3極
2 CIRCUITS

3-5極
3-5 CKTS

6-11極
6-11 CKTS

12-15極
12-15 CKTS

E	D	CKT NO.
6	5.2	15
		14
		13
		12
		11
	3.2	10
		9
	2.5	8
		7
2.9	2.3	6
	3.6	5
	3.3	4
	2.55	3
	2.3	2

ロック形状および吸着エリア

LOCK SHAPE AND VACCUME AREA

THIS DRAWING CONTAINS INFORMATION THAT IS PROPRIETARY TO MOLEX ELECTRONIC TECHNOLOGIES, LLC AND SHOULD NOT BE USED WITHOUT WRITTEN PERMISSION

DIMENSION UNITS	SCALE
mm	NTS

GENERAL TOLERANCES (UNLESS SPECIFIED)

ANGULAR TOL	±	3.0 °
4 PLACES	±	0.2
3 PLACES	±	0.2
2 PLACES	±	0.2
1 PLACE	±	0.2
0 PLACES	±	0.2

DRAFT WHERE APPLICABLE MUST REMAIN WITHIN DIMENSIONS

CURRENT REV DESC:

EC NO: 742719
DRWN: MIKEDA01 2023/06/23
CHK'D: SAKIYAMA 2023/06/23
APPR: AIDA 2023/06/23

INITIAL REVISION:
DRWN: MIKEDA01 2019/10/01
APPR: KOMURAKAMI 2019/11/20

THIRD ANGLE PROJECTION | DRAWING: A3-SIZE | SERIES: 213226

molex

CLIK-MATE 1.5
SINGLE ROW SMT R/A TYPE REC ASSY GOLD PLATING

PRODUCT CUSTOMER DRAWING

DOCUMENT NUMBER	DOC TYPE	DOC PART	REVISION
2132260000-SD	PSD	000	E

MATERIAL NUMBER | CUSTOMER: GENERAL | SHEET NUMBER: 2 OF 5

DOCUMENT STATUS	P1	RELEASE DATE	2023/06/23 10:36:42

FORMAT: master-tb-prod-A3
REVISION: J
DATE: 2020/01/14

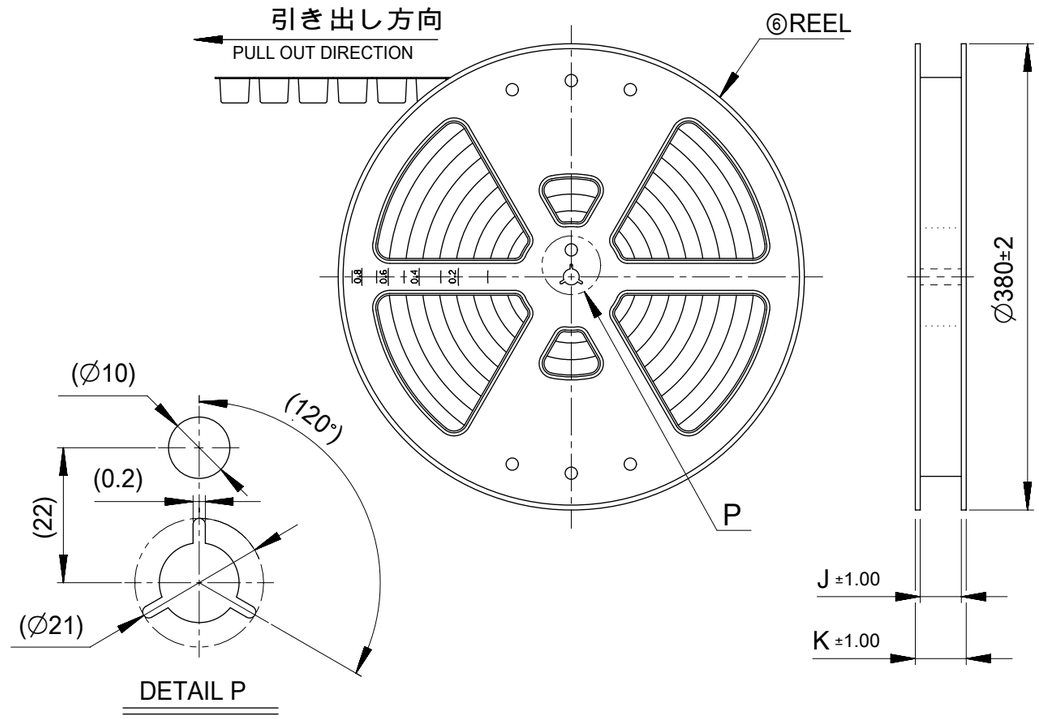

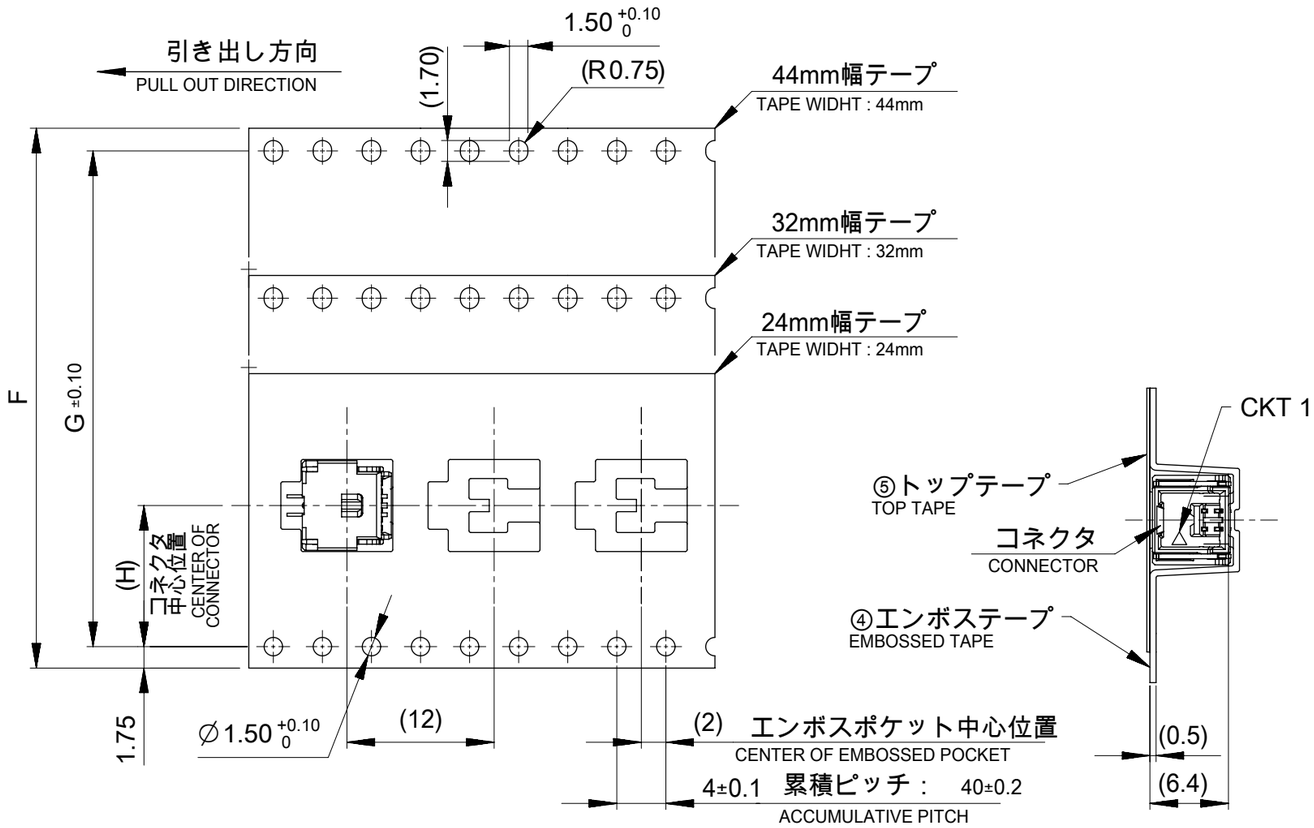

NOTES

5. 梱包数量 : 1,000個/リール
   NUMBER OF CONNECTORS: 1,000 PIECES/REEL
6. リードテープ長さ
   LEAD TAPE LENGTH

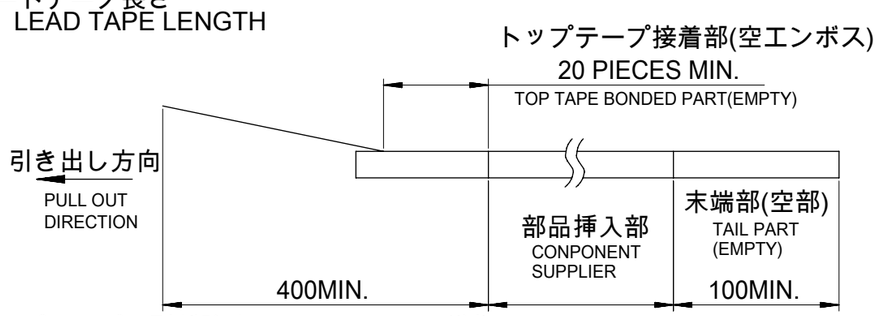

7. トップテープの剥離強度はJIS C0806-3に準拠
   TOP TAPE PEELING FORCE IS DIFINED BY JIS C0806-3.
8. 本製品は乾燥剤入り、ハイバリア梱包による納入である
   THIS PRODUCT IS DELIVERED IN A HIGH-BARRIER PACKAGE WITH DESICCANT

番号 No.	部品 PART	材質 MATERIAL
④	エンボステープ EMBOSSED TAPE	ポリスチレン(PS) POLYSTYLENE
⑤	トップテープ TOP TAPE	ポリエチレン、ポリエチレンテレフタレート POLYETHYLENE (PE), POLYETHYLENE TELEPHTHALATE(PET)
⑥	リール REEL	ポリスチレン (リサイクル材を含む) POLYSTYLENE (CONTAINED RECYCLED MATERIAL)

DOCUMENT STATUS	P1	RELEASE DATE	2023/06/23 10:36:42

F	G	H	J	K	エンボステープ幅F WIDTH OF TAPE	極数 CKT. NO.
49.4	45.4	20.2	40.4		44±0.3	15
						14
						13
						12
						11
						10
37.4	33.4	14.2	28.4		32±0.3	9
						8
						7
						6
29.4	25.4	11.5	-		24 +0.3 -0.1	5
						4
						3
						2

THIS DRAWING CONTAINS INFORMATION THAT IS PROPRIETARY TO MOLEX ELECTRONIC TECHNOLOGIES, LLC AND SHOULD NOT BE USED WITHOUT WRITTEN PERMISSION

DIMENSION UNITS	SCALE
mm	NTS

GENERAL TOLERANCES (UNLESS SPECIFIED)

ANGULAR TOL	±	3.0 °
4 PLACES	±	0.2
3 PLACES	±	0.2
2 PLACES	±	0.2
1 PLACE	±	0.2
0 PLACES	±	0.2

DRAFT WHERE APPLICABLE MUST REMAIN WITHIN DIMENSIONS

CURRENT REV DESC:

EC NO: 742719
DRWN: MIKEDA01 2023/06/23
CHK'D: SAKIYAMA 2023/06/23
APPR: AIDA 2023/06/23

INITIAL REVISION:
DRWN: MIKEDA01 2019/10/01
APPR: KOMURAKAMI 2019/11/20

molex

CLIK-MATE 1.5
SINGLE ROW SMT R/A TYPE REC ASSY GOLD PLATING

PRODUCT CUSTOMER DRAWING

DOCUMENT NUMBER	DOC TYPE	DOC PART	REVISION
2132260000-SD	PSD	000	E

THIRD ANGLE PROJECTION	DRAWING	SERIES	MATERIAL NUMBER	CUSTOMER	SHEET NUMBER
	A3-SIZE	213226		GENERAL	3 OF 5

△3 適用製品及び各種仕様書
APPLICABLE PRODUCTS AND VARIOUS SPECIFICATIONS

梱包仕様書 PACKAGING SPECIFICATION	PART NUMBER	DOCUMENT NUMBER
	213226 ****	2132269200-SPK

適用嵌合相手 MATE WITH	HOUSING	TERMINAL (GOLD PLATING)		
		PLATING THK	#24-28	#28-30
製品番号 PRODUCT NUMBER	502578 ****	0.1 micro-meters	213028 1*00	213029 1*00
		0.38 micro-meters	213028 3*00	213029 3*00
		0.76 micro-meters	213028 7*00	213029 7*00
製品仕様書 PRODUCT SPECIFICATION	5025780004-PS			
アプリケーション仕様書 APPLICATION SPECIFICATION	AS-502578-00* (*: 1…JAPANESE, 2…ENGLISH)			

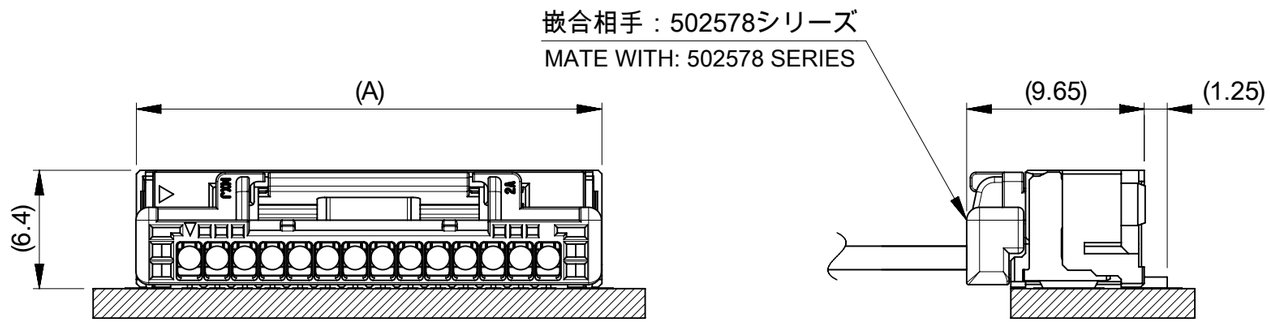

嵌合図
MATED CONNECTORS

THIS DRAWING CONTAINS INFORMATION THAT IS PROPRIETARY TO MOLEX ELECTRONIC TECHNOLOGIES, LLC AND SHOULD NOT BE USED WITHOUT WRITTEN PERMISSION

DIMENSION UNITS	SCALE
mm	NTS

GENERAL TOLERANCES (UNLESS SPECIFIED)		
ANGULAR TOL	±	3.0 °
4 PLACES	±	0.2
3 PLACES	±	0.2
2 PLACES	±	0.2
1 PLACE	±	0.2
0 PLACES	±	0.2

DRAFT WHERE APPLICABLE MUST REMAIN WITHIN DIMENSIONS

CURRENT REV DESC:

EC NO: 742719
DRWN: MIKEDA01 2023/06/23
CHK'D: SAKIYAMA 2023/06/23
APPR: AIDA 2023/06/23

INITIAL REVISION:
DRWN: MIKEDA01 2019/10/01
APPR: KOMURAKAMI 2019/11/20

THIRD ANGLE PROJECTION | DRAWING: A3-SIZE | SERIES: 213226

molex

CLIK-MATE 1.5
SINGLE ROW SMT R/A TYPE REC ASSY GOLD PLATING

PRODUCT CUSTOMER DRAWING

DOCUMENT NUMBER	DOC TYPE	DOC PART	REVISION
2132260000-SD	PSD	000	E

MATERIAL NUMBER	CUSTOMER	SHEET NUMBER
	GENERAL	4 OF 5

DOCUMENT STATUS	P1	RELEASE DATE	2023/06/23 10:36:42

FORMAT: master-tb-prod-A3
REVISION: J
DATE: 2020/01/14

△4 製品一覧
PRODUCTS LIST

黒 BLACK	ナチュラル NATURAL	HOUSING COLOR	
213226 1511	213226 1510	15	213226 **1* (GOLD PLATING THICKNESS: 0.1 micro-meters MIN)
213226 1411	213226 1410	14	
213226 1311	213226 1310	13	
213226 1211	213226 1210	12	
213226 1111	213226 1110	11	
213226 1011	213226 1010	10	
213226 0911	213226 0910	9	
213226 0811	213226 0810	8	
213226 0711	213226 0710	7	
213226 0611	213226 0610	6	
213226 0511	213226 0510	5	
213226 0411	213226 0410	4	
213226 0311	213226 0310	3	
213226 0211	213226 0210	2	
オーダー番号 ORDER No		極数 CKT	MODEL NO

黒 BLACK	ナチュラル NATURAL	HOUSING COLOR	
213226 1531	213226 1530	15	213226 **3* (GOLD PLATING THICKNESS: 0.38 micro-meters MIN)
213226 1431	213226 1430	14	
213226 1331	213226 1330	13	
213226 1231	213226 1230	12	
213226 1131	213226 1130	11	
213226 1031	213226 1030	10	
213226 0931	213226 0930	9	
213226 0831	213226 0830	8	
213226 0731	213226 0730	7	
213226 0631	213226 0630	6	
213226 0531	213226 0530	5	
213226 0431	213226 0430	4	
213226 0331	213226 0330	3	
213226 0231	213226 0230	2	
オーダー番号 ORDER No		極数 CKT	MODEL NO

黒 BLACK	ナチュラル NATURAL	HOUSING COLOR	
213226 1571	213226 1570	15	213226 **7* (GOLD PLATING THICKNESS: 0.76 micro-meters MIN)
213226 1471	213226 1470	14	
213226 1371	213226 1370	13	
213226 1271	213226 1270	12	
213226 1171	213226 1170	11	
213226 1071	213226 1070	10	
213226 0971	213226 0970	9	
213226 0871	213226 0870	8	
213226 0771	213226 0770	7	
213226 0671	213226 0670	6	
213226 0571	213226 0570	5	
213226 0471	213226 0470	4	
213226 0371	213226 0370	3	
213226 0271	213226 0270	2	
オーダー番号 ORDER No		極数 CKT	MODEL NO

THIS DRAWING CONTAINS INFORMATION THAT IS PROPRIETARY TO MOLEX ELECTRONIC TECHNOLOGIES, LLC AND SHOULD NOT BE USED WITHOUT WRITTEN PERMISSION

DIMENSION UNITS	SCALE
mm	NTS

GENERAL TOLERANCES (UNLESS SPECIFIED)

ANGULAR TOL	±	3.0 °
4 PLACES	±	0.2
3 PLACES	±	0.2
2 PLACES	±	0.2
1 PLACE	±	0.2
0 PLACES	±	0.2

DRAFT WHERE APPLICABLE MUST REMAIN WITHIN DIMENSIONS

CURRENT REV DESC:

EC NO: 742719
DRWN: MIKEDA01 2023/06/23
CHK'D: SAKIYAMA 2023/06/23
APPR: AIDA 2023/06/23

INITIAL REVISION:
DRWN: MIKEDA01 2019/10/01
APPR: KOMURAKAMI 2019/11/20

THIRD ANGLE PROJECTION | DRAWING: A3-SIZE | SERIES: 213226

molex

CLIK-MATE 1.5
SINGLE ROW SMT R/A TYPE REC ASSY GOLD PLATING

PRODUCT CUSTOMER DRAWING

DOCUMENT NUMBER	DOC TYPE	DOC PART	REVISION
2132260000-SD	PSD	000	E

MATERIAL NUMBER	CUSTOMER	SHEET NUMBER
	GENERAL	5 OF 5

DOCUMENT STATUS	P1	RELEASE DATE	2023/06/23 10:36:42

FORMAT: master-lb-prod-A3
REVISION: J
DATE: 2020/01/14