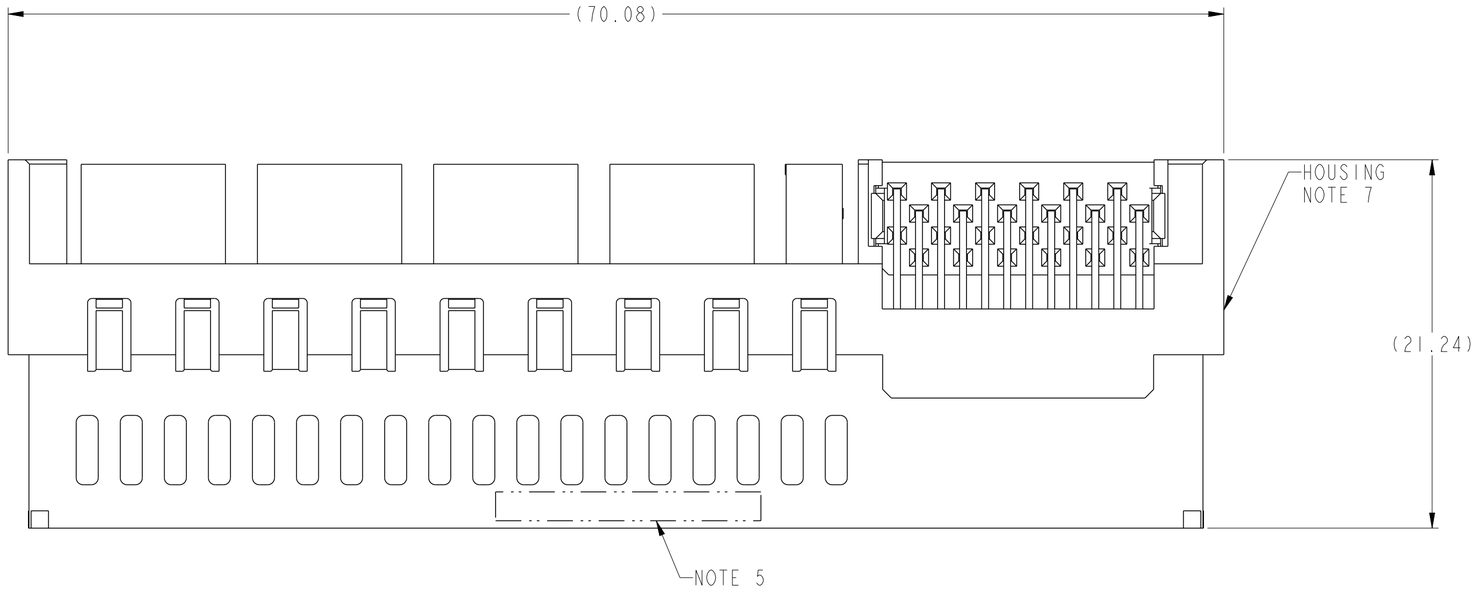

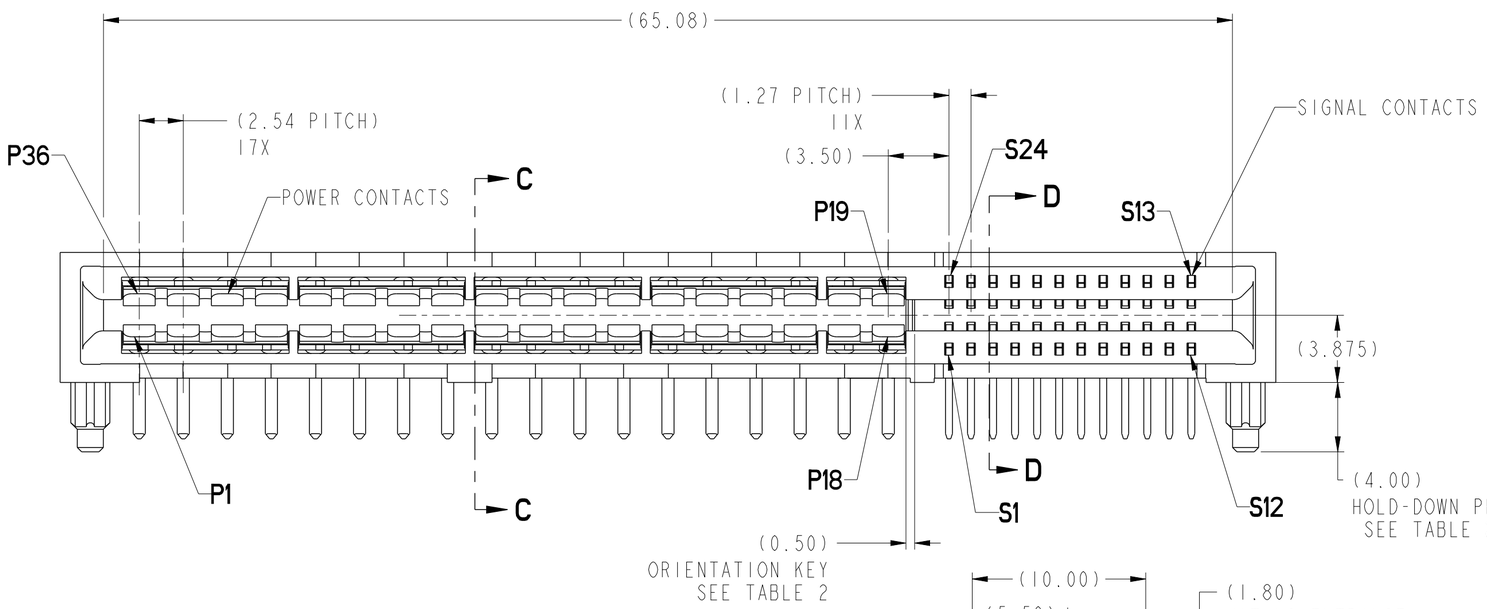

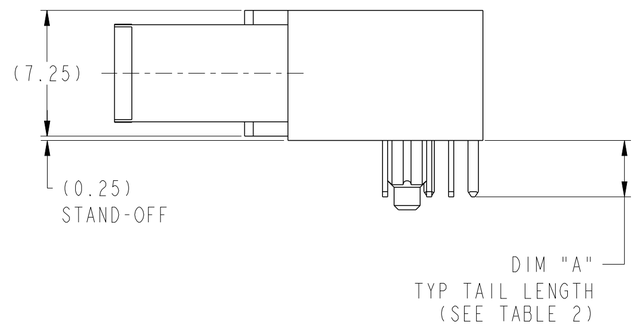

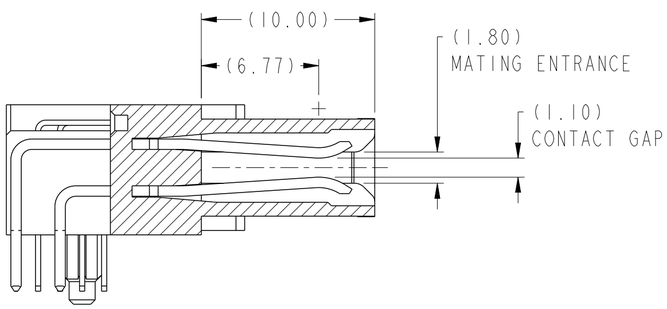

SECTION C-C

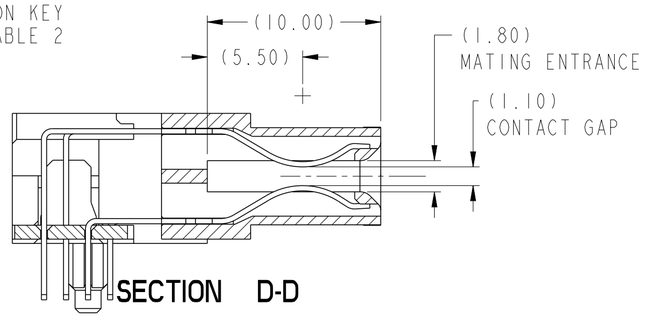

SECTION D-D

spec ref -			dr	Chris Gieski	2010/08/27	projection	MM	size A2 / scale 4:1
tolerance std - ASME Y14.5	TOLERANCES UNLESS OTHERWISE SPECIFIED		eng	De-Ming Lu	2014/06/05			ecn no ELX-DG-17838-1
			chr	-	-			
			appr	Pei-Ming Zheng	2014/06/05	product family	HPCE	rel level Released
surface - ASME Y14.5	linear	0.X	±0.3	FCI	title	R/A RECT (36P-24S) HIGH POWER CARD EDGE	dwg no 10115859	rev D
		0.XX	±0.10					
		0.XXX	±0.050					
	angular	0°	±-°	www.fci.com	cat. no. -	Product - Customer Drw		sheet 1 of 4

Copyright FCI.

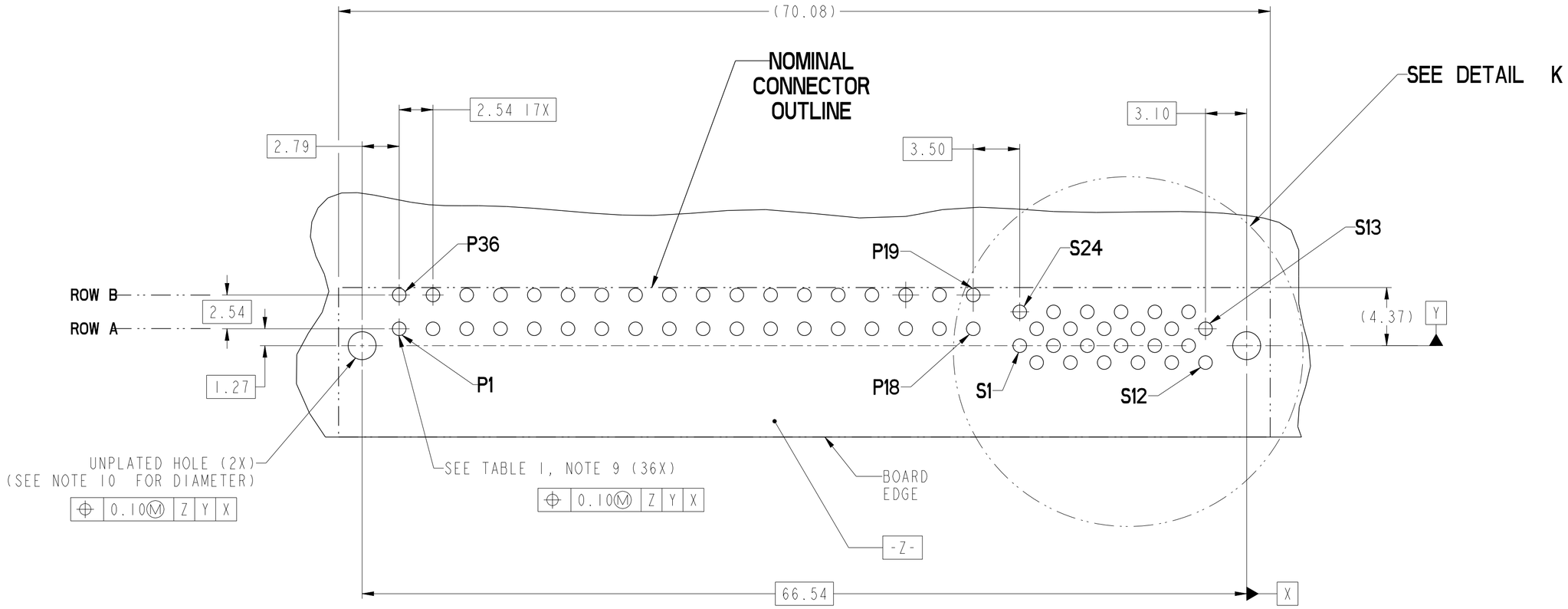

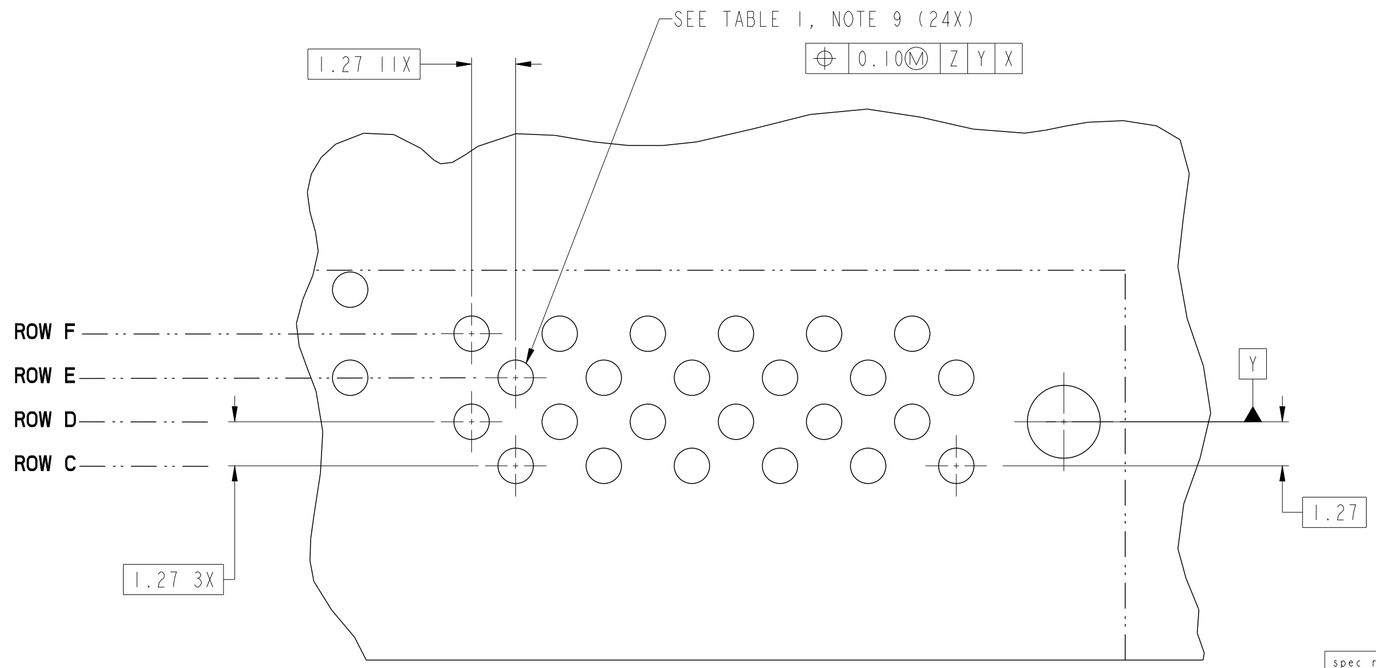

DETAIL K
SCALE 8:1

RECOMMENDED PCB LAYOUT VIEWED FROM CONNECTOR SIDE

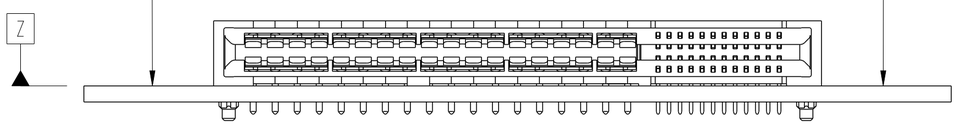

spec ref -			dr	Chris Gieski	2010/08/27	projection	MM
tolerance std - ASME Y14.5	TOLERANCES UNLESS OTHERWISE SPECIFIED		eng	De-Ming Lu	2014/06/05		
			chr	-	-		
			appr	Pei-Ming Zheng	2014/06/05	product family	HPCE
surface - ✓ ASME Y14.5	linear	0.X	±0.3	FCI	title	R/A RECT (36P-24S) HIGH POWER CARD EDGE	dwg no 10115859
		0.XX	±0.10				
		0.XXX	±0.050				
	angular	0°	±-°	www.fci.com	cat. no. -	Product - Customer Drw	

size	scale	rev
A2	4:1	D

ecn no ELX-DG-17838-1
rel level **Released**
sheet 2 of 4

Copyright FCI.

CONTACT TYPE	TOP LAYER DESCRIPTION	TABLE 1 (HPCE / SOLDER TAILS) PLATED THROUGH-HOLE REQUIREMENTS				
		DRILLED HOLE DIAMETER	COPPER THICKNESS	TIN-LEAD THICKNESS	TIN THICKNESS	FINISHED HOLE DIAMETER
POWER & SIGNAL	TIN-LEAD	1.10-1.16 (1.15 DRILL)	0.025 - 0.050	0.005 - 0.015	--	0.94 - 1.10
	IMMERSION TIN	1.10-1.16 (1.15 DRILL)	0.025 - 0.050	--	0.9 - 1.5um	0.94 - 1.10
	COPPER (SEE NOTE 8)	1.10-1.16 (1.15 DRILL)	0.025 - 0.050	--	--	0.94 - 1.10

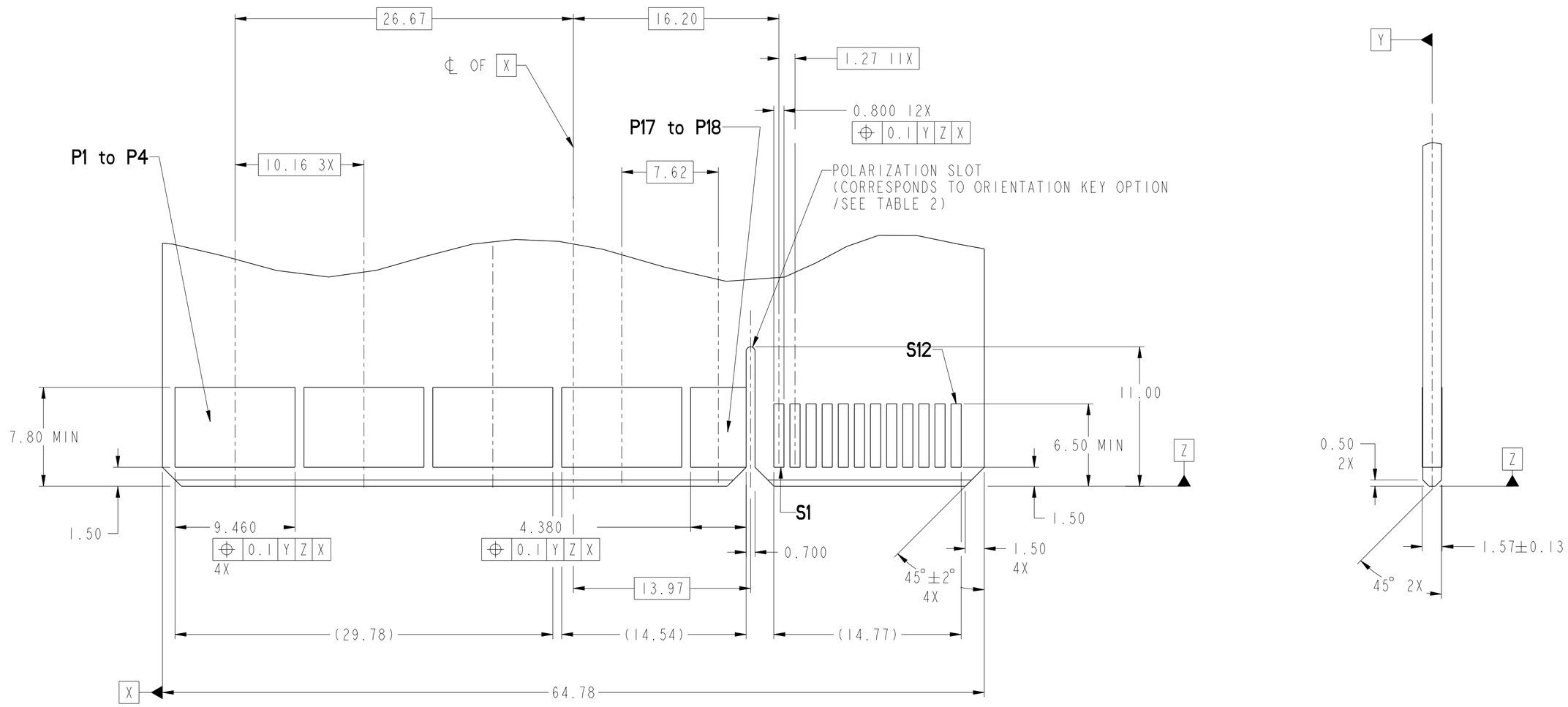

RECOMMENDED MATING BOARD FOOTPRINT

spec ref -			dr Chris Gieski 2010/08/27	projection	MM	size A2	scale 4:1
tolerance std - ASME Y14.5	TOLERANCES UNLESS OTHERWISE SPECIFIED		eng De-Ming Lu 2014/06/05			ecn no	ELX-DG-17838-1
			chr - -				
			appr Pei-Ming Zheng 2014/06/05	product family	HPCE	rel level	Released
surface - ASME Y14.5	linear	0.X ±0.3	FCI	title R/A RECT (36P-24S) HIGH POWER CARD EDGE		dwg no 10115859	rev D
		0.XX ±0.10					
		0.XXX ±0.050					
	angular	0° ±-°	www.fci.com	cat. no. -	Product - Customer Drw		sheet 3 of 4

Copyright FCI.

HPCE PART NUMBER (TABLE 2)

PART NUMBER	TAIL TYPE	HOLD-DOWN OPTION	ORIENTATION KEY	DIM "A" TYPICAL TAIL LENGTH
10115859-001LF	SOLDER TAIL	NO	YES	3.25±0.25
10115859-002LF			NO	
10115859-003LF		YES	YES	
10115859-004LF			NO	
10115859-005LF		NO	YES	4.05±0.25
10115859-006LF			NO	
10115859-007LF		YES	YES	
10115859-008LF			NO	
10115859-009LF		NO	YES	4.85±0.25
10115859-010LF			NO	
10115859-011LF		YES	YES	
10115859-012LF			NO	
10115859-013LF △D		NO	YES	2.60±0.25
10115859-014LF △D			NO	
10115859-015LF △D		YES	YES	
10115859-016LF △D			NO	

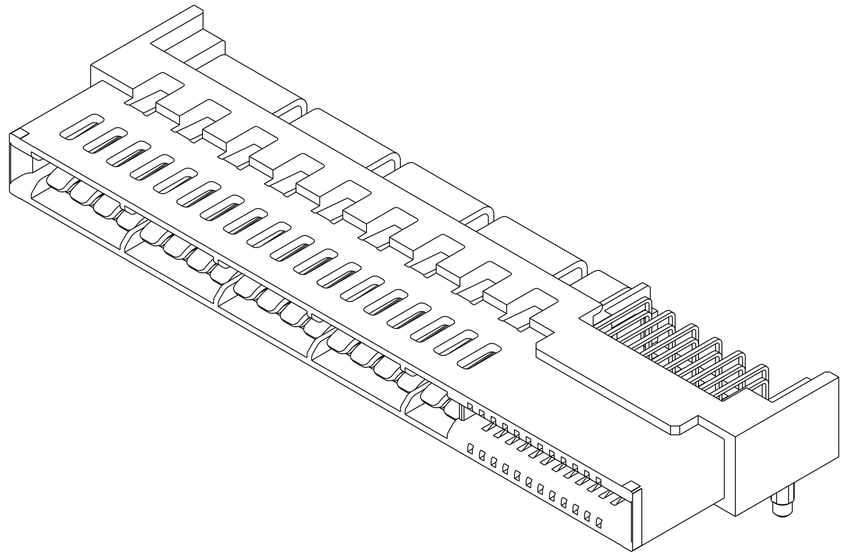

NOTES:

1. CONNECTOR MATERIALS:
   - HOUSING: HIGH TEMPERATURE THERMAL PLASTIC, BLACK UL 94V-0 COMPLIANT
   - CONTACTS: HIGH PERFORMANCE COPPER ALLOY.
2. CONTACT FINISH REF. GS-12-604 SECTION 5.2.
3. PRODUCT SPECIFICATION: GS-12-604.
4. APPLICATION SPECIFICATION: GS-20-128.
5. PRODUCT MARKING (FCI - PART NUMBER & DATE CODE) ON HOUSING IN AREA SHOWN.
6. PACKAGING MEETS FCI SPECIFICATION GS-14-937.
7. HOUSING COMPONENT WILL WITHSTAND EXPOSURE TO 260°C PEAK TEMPERATURE FOR 60 SECONDS IN A CONVECTION, INFRA-RED, OR VAPOR PHASE REFLOW OVEN.
8. COPPER PLATING THICKNESS IN CENTER OF VIA-HOLE CAN BE NO MORE THAN 0.003 LESS THAN OTHER AREAS.
9. ALL HOLE SIZES ARE FINISHED HOLE SIZES.
10. MOUNTING HOLES ARE UNPLATED
    ∅ 2.10 +/- 0.1 FOR SOLDER TAILS
11. △D A △D SYMBOL WILL BE NEXT TO ANY DIMENSION, VIEW, OR NOTE WHICH HAS BEEN MODIFIED WITH THE CURRENT DRAWING REVISION.

spec ref	-	dr	Chris Gieski	2010/08/27	projection
tolerance std - ASME Y14.5	TOLERANCES UNLESS OTHERWISE SPECIFIED	eng	De-Ming Lu	2014/06/05	MM
		chr	-	-	
		appr	Pei-Ming Zheng	2014/06/05	product family: HPCE

size	A2	scale	4:1
ecn no	ELX-DG-17838-1		
rel level	Released		

surface -	linear	0.X	±0.3
		0.XX	±0.10
		0.XXX	±0.050
ASME Y14.5	angular	0°	±-°

FCI — www.fci.com

title: R/A RECT (36P-24S) HIGH POWER CARD EDGE

dwg no: 10115859 — rev: D

cat. no. - — Product - Customer Drw — sheet 4 of 4

Copyright FCI.

Mouser Electronics

Authorized Distributor

Click to View Pricing, Inventory, Delivery & Lifecycle Information:

FCI / Amphenol:

10115859-004LF 10115859-007LF 10115859-008LF 10115859-012LF 10115859-011LF 10115859-003LF 10115859-016LF 10115859-006LF 10115859-002LF