STDLIB-SW2016

SUB ASSEMBLY PART NO. AND CH. CODE	NO.	PART NO. AND CH. CODE	PART NAME	MATERIAL	COLOR
7298-2755-30	①	7198-2755-30	HS 025 8P SEALED HOUSING FEMALE	PBT	BLACK
	②	7172-1675	HS 025 8P SEALED FRONT RETAINER FEMALE	PBT-G	NATURAL
	③	7137-3218-80	HS 025 8P SEALED PACKING	SILICONE RUBBER	BROWN

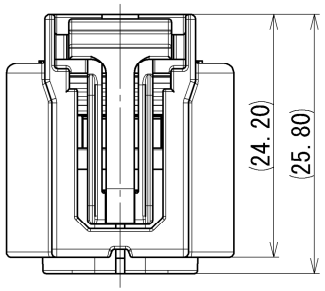

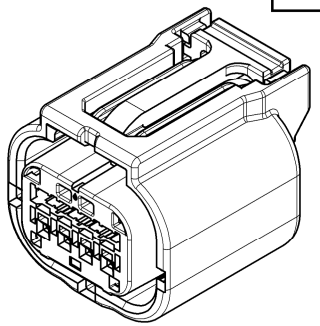

ISOMETRIC VIEW

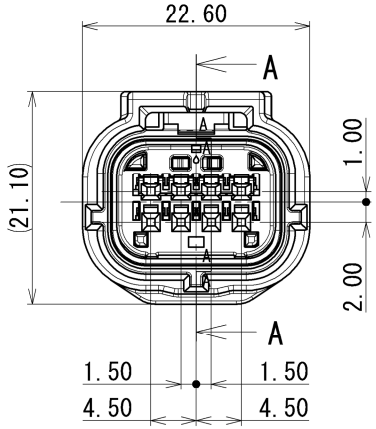

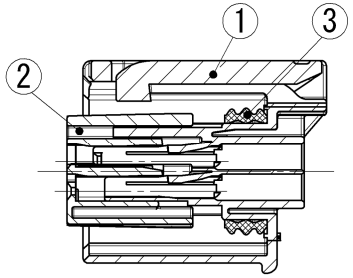

SEC. A-A

注記

1. かん合相手品番 ： 機器直結
2. 適用端子品番 ： 7116-4415-02, 7116-4416-02, 7116-4417-02
3. 適用ゴム栓品番 ： 7158-3165-90, 7158-3166-60, 7158-3167-80, 7158-3168-80
4. 適用防水栓品番 ： 7158-3169-40

NOTES

1. MATING PART NO. : DIRECT EQUIPMENT CONNECTION
2. APPLICABLE TERMINAL NO. : 7116-4415-02, 7116-4416-02, 7116-4417-02
3. APPLICABLE SEAL RUBBER NO. : 7158-3165-90, 7158-3166-60, 7158-3167-80, 7158-3168-80
4. APPLICABLE RUBBER STOPPER NO. : 7158-3169-40

GENERAL TOLERANCE

	10 MAX	50 MAX	100 MAX	250 MAX	250 OVR	R5 MAX	R10 MAX	R20 MAX	R20 OVR	ANGLE	ECCENT
A	±0.15	±0.2	±0.3	±0.5	±0.75	±0.2	±0.3	±0.5	±2.5	±3°	0.1
B	±0.2	±0.3	±0.55	±0.95	±1.4					±3°	0.1
C	±0.3	±0.5	±0.8	±1.4	±2					±3°	0.15

ISSUE MARK

LET	DATE	REVISION RECORD	NO.	CHKD
	2018/11/29	NEW	C18-P388	Y.M

GENERAL TOLERANCE

	10MAX	50MAX	100MAX	250MAX	250OVR	ANGLE	ECCENT
A	±0.15	±0.2	±0.3	±0.5	±0.75	±0.5°	0.1
B	±0.2	±0.3	±0.55	±0.95	±1.4	±1.0°	0.1
C	±0.3	±0.5	±0.8	±1.4	±2	±1.5°	0.15

SPECIFIED

MASS (6.2) g

CUSTOMER
CUSTOMER PART NO.
CUSTOMER DWG NO.
OFFICE
TRIAL PART NO. or PRODUCT NO.
VENDOR
VENDOR NO.

DWG TYPE	DWG SOURCE	DWG DATE	UNIT	SCL	ANGLE
R	NEW	2018/11/29	mm	2:1	3

APPROVED	CHECKED	CHECKED	DESIGN	DRAWN
S. KODAMA	N. KOBAYASHI	———	K. IKEYA	Y. MAEDA
2018/11/29	2018/11/29	———	2018/09/11	2018/11/29

MATL. SPEC. SEE TABLE
TREAT. & FIN.

NAME HS 025 8P SEALED SUB ASSEMBLY FEMALE

PART NO. CH. CODE 7298-2755-30

DWG NO. 7298-2755-30:R

SET DWG NO.

YAZAKI Corporation

A3