SAMZO | REAC/ROHS

REV	ECN NO	DESRIPTION	DESIGN	APPROVAL	DATE
A1	NEW	Replace frame			2023.09.03

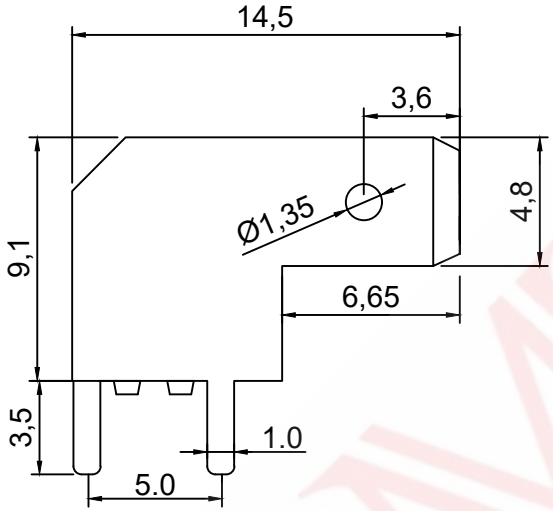

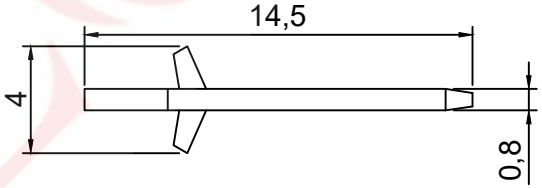

TERMINAL:
>MATERIAL:C2680
>THICKNESS:0.8mm
>BAG QTY:2000PCS
NOTE:
1.CURRENT RATING:10A MAX
2.VOLTAGE RANGE:220V AC.DC
3.TEMPERATURE RANGE:-20℃ TO 105℃

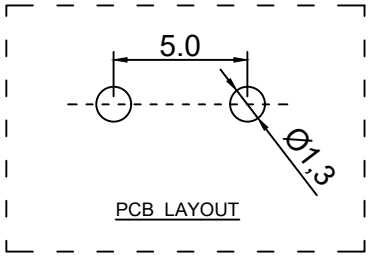

ITEM	DESCRIPTION	MATERIAL	QTY	FINSH/COLOR
A	主体	黄铜	1	镀亮锡

DESIGN	WANGGUIFA	2018.06.12
CHECKED	ZHENGUILAN	2018.06.12
APPROVED	LILIANJIANG	2018.06.14

GENERAL TOLERANCE	
⩾0~2<	±0.15
⩾2~5<	±0.25
⩾0~2<	±0.15
⩾5	±0.35

FIRST VIEW

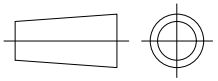

SCALE	1:1	UNIT	mm

The copyright belongs to samzo parts [China] Co., Ltd. please use the material after samzo parts agree to authorize. The final right of interpretation belongs to samzo parts.
WWW.KKK-JP.COM

SAMZO COMPONENTS
Electronic switch and connector manufacturer

TITLE:: 4.8*14.5*9.1 Ø1.35
DWG NO: G48-14W07
PART NO: G481025007
MODEL NO: G480-11-3H
NAME: GASKET