SAMZO | REAC/ROHS

REV	ECN NO	DESRIPTION	DESIGN	APPROVAL	DATE
A1	NEW	Replace frame			2018.06.12

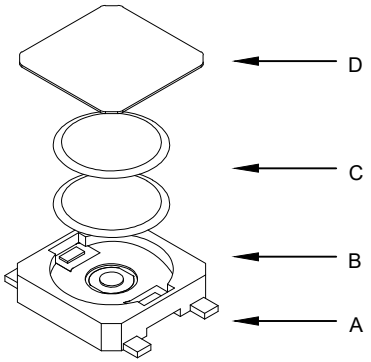

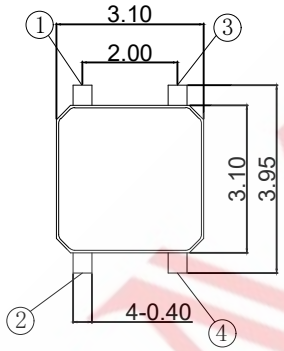

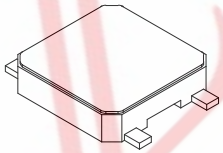

主要技术参数、性能
The Main Thchnology Performance

额定电流、电压 Rate voltage.current	50mA DC12V
接触电阻 Contact resistance	≤100mΩ
按力 Operating force	±50gf
行程 Travel	0.20±0.10mm
绝缘电阻 Insulated resistance	≥100MΩ
介电强度 Dielectric strength	≥250VAC/1min

W	4	B	0	0	*	*	1	0
Ⓐ	Ⓑ	Ⓒ	Ⓓ		Ⓔ	Ⓕ	Ⓖ	Ⓗ

A.系列:W-3*3mm系列
B.贴装方式:4-立式贴片
C.引脚规格:B-4P
D.操作高度:00-0.75mm
E:操作力度:1-120gf/2-180/3-260gf
F:操作寿命:1-30,000次/2-100,000次/3-200,000次
G:固定方式:1-不带住
H:物料编码:0-常规

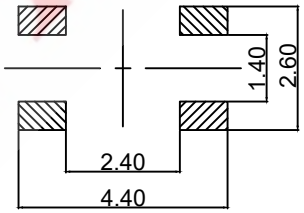

PCB.焊接图
PCB.WELDING DRAWING

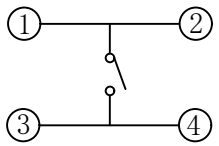

电路图
CIRCUIT DIAGRAM

ITEM	DESCRIPTION	MATERIAL	QTY	FINSH/COLOR					
								GENERAL TOLERANCE	
D	防尘膜	聚酰亚胺	1	黄色				≥0~2<	±0.15
C	弹片	不锈钢	2	镀银	DESIGN	WANGGUIFA	2018.06.12	≥2~5<	±0.25
B	本件	LCP	1	黑色	CHECKED	ZHENGUILAN	2018.06.12	≥0~2<	±0.15
A	卡件	磷铜	1	镀银	APPROVED	LILIANJIANG	2018.06.14	≥5	±0.35

FIRST VIEW

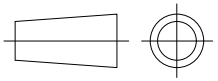

SCALE 1:1 UNIT mm

The copyright belongs to samzo parts [China] Co., Ltd. please use the material after samzo parts agree to authorize. The final right of interpretation belongs to samzo parts.
WWW.KKK-JP.COM

SAMZO COMPONENTS
Electronic switch and connector manufacturer

TITLE:: 3.1*3.1*0.75 mm 4P
DWG NO: W4B00-P01
PART NO: W4B003171
MODEL NO: W4B00-*-*-10
NAME: TACT SWITCH