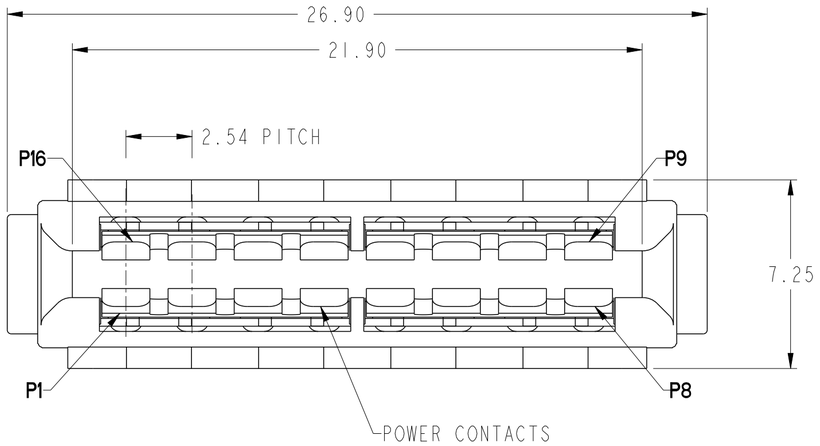

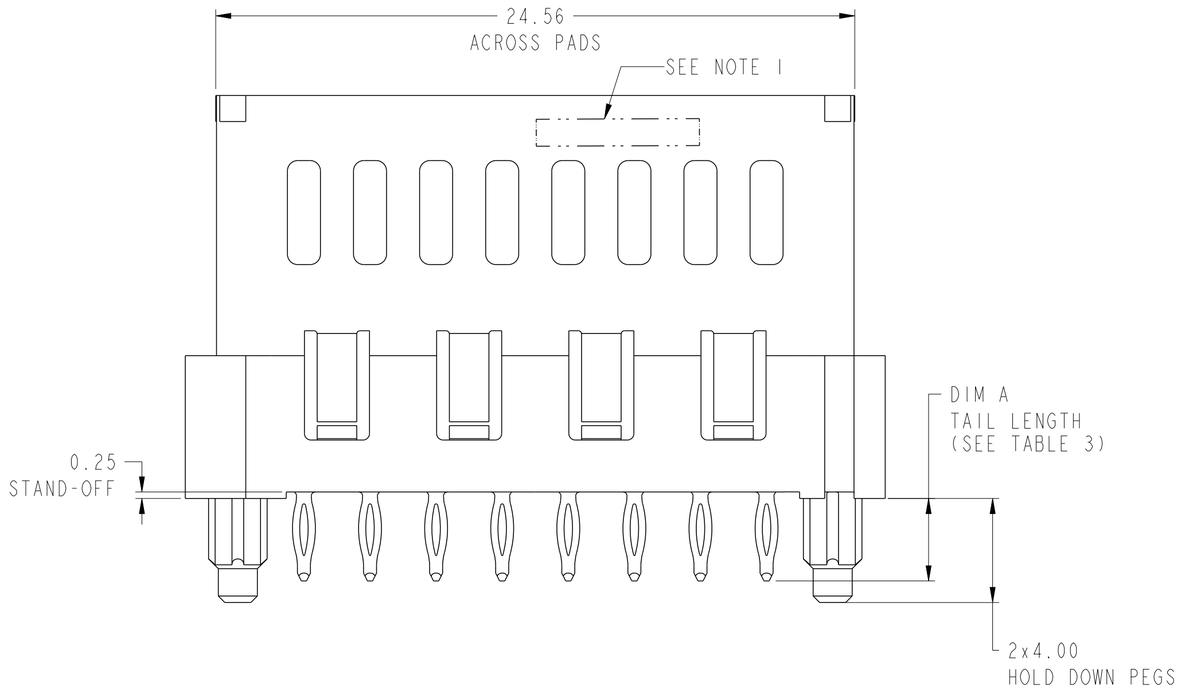

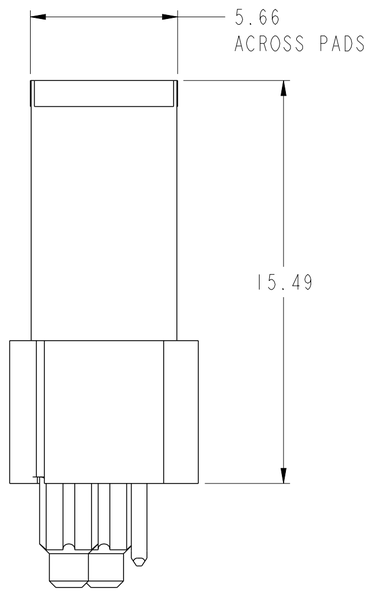

spec ref	-			dr	Feng Zheng	2016/11/15	projection	MM	size A2 / scale 6:1
tolerance std ISO 406 ISO 1101	TOLERANCES UNLESS OTHERWISE SPECIFIED			eng	Feng Zheng	2016/12/08			ecn no -
				chr	Terris Liu	2016/12/08			
				appr	Pei-Ming Zheng	2016/12/08	product family		rel level **Released**
surface ✓ ISO 1302	linear	0.X	±0.5	Amphenol FCi	title	HPCE VT RECT 4HP FOR LOW HF		dwg no 10141854	rev A
		0.XX	±0.25						
		0.XXX	±0.10						
	angular	0°	±2°		cat. no.		Product - Customer Drw		sheet 1 of 4

© 2016 AFCI

Amphenol FCi

Creo File - REV E - 2016-02-12

CONTACT TYPE	TOP LAYER DESCRIPTION	TABLE 1 (HPCE / SOLDER TAILS) PLATED THROUGH-HOLE REQUIREMENTS				
		DRILLED HOLE DIAMETER	COPPER THICKNESS	TIN-LEAD THICKNESS	TIN THICKNESS	FINISHED HOLE DIAMETER
POWER & SIGNAL	TIN-LEAD	1.10-1.16 (1.15 DRILL)	0.025 - 0.050	0.005 - 0.015	--	0.94 - 1.10
	IMMERSION TIN	1.10-1.16 (1.15 DRILL)	0.025 - 0.050	--	0.9 - 1.5um	0.94 - 1.10
	COPPER	1.10-1.16 (1.15 DRILL)	0.025 - 0.050	--	--	0.94 - 1.10

CONTACT TYPE	TOP LAYER DESCRIPTION	TABLE 2 (HPCE / PRESS-FIT TAILS) PLATED THROUGH-HOLE REQUIREMENTS				
		DRILLED HOLE DIAMETER	COPPER THICKNESS	TIN-LEAD THICKNESS	TIN THICKNESS	FINISHED HOLE DIAMETER
POWER & SIGNAL	TIN-LEAD	0.81-0.86 (0.85 DRILL)	0.025 - 0.050	0.005 - 0.015	--	0.65 - 0.80
	IMMERSION TIN	0.81-0.86 (0.85 DRILL)	0.025 - 0.050	--	0.9 - 1.5um	0.70 - 0.80
	COPPER	0.81-0.86 (0.85 DRILL)	0.025 - 0.050	--	--	0.70 - 0.80

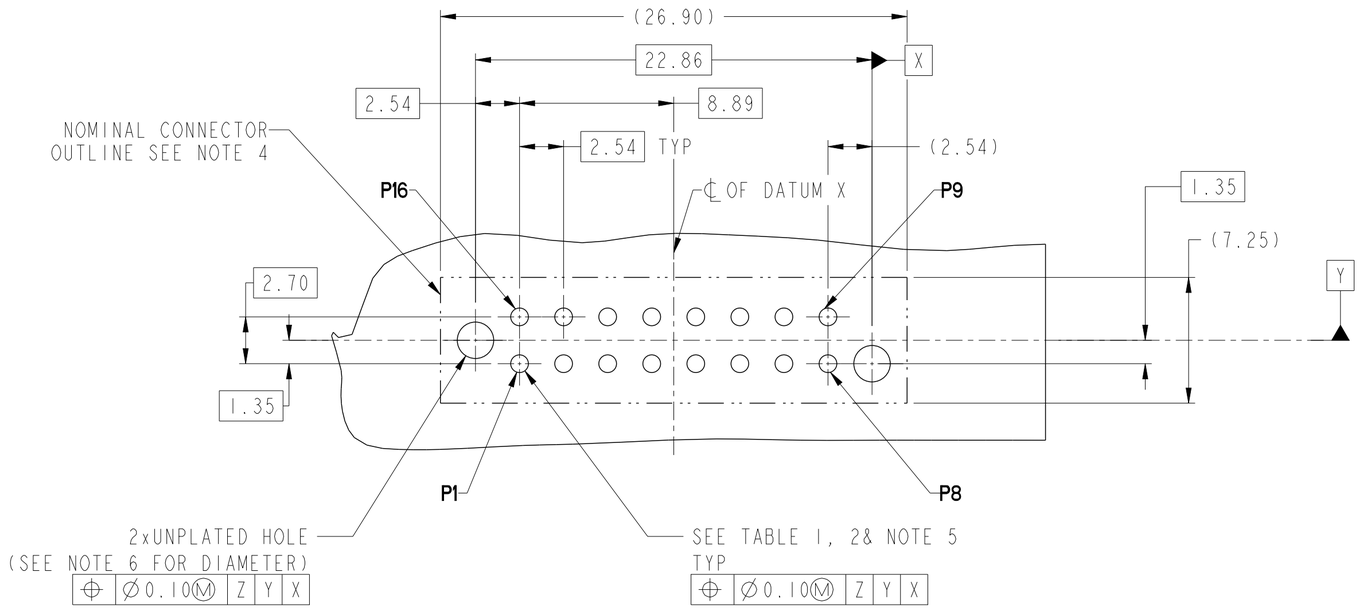

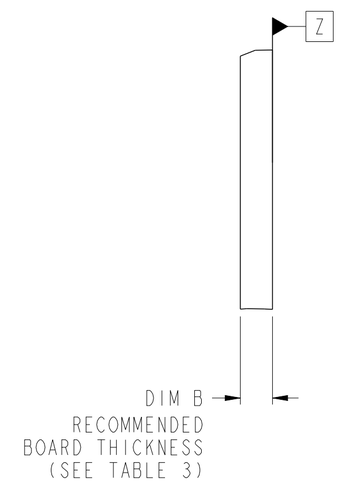

RECOMMENDED HOST BOARD LAYOUT
DIMENSION TOLERANCE IS ±0.05MM

spec ref -		dr Feng Zheng 2016/11/15	projection	MM	size A2	scale 4:1
tolerance std ISO 406 ISO 1101	TOLERANCES UNLESS OTHERWISE SPECIFIED	eng Feng Zheng 2016/12/08			ecn no -	
		chr Terris Liu 2016/12/08				
		appr Pei-Ming Zheng 2016/12/08	product family		rel level Released	
surface ISO 1302	linear 0.X ±0.5	Amphenol FCi	title HPCE VT RECT 4HP FOR LOW HF		dwg no 10141854	rev A
	0.XX ±0.25					
	0.XXX ±0.10					
	angular 0° ±2°		cat. no.	Product - Customer Drw	sheet 2 of 4	

© 2016 AFCI

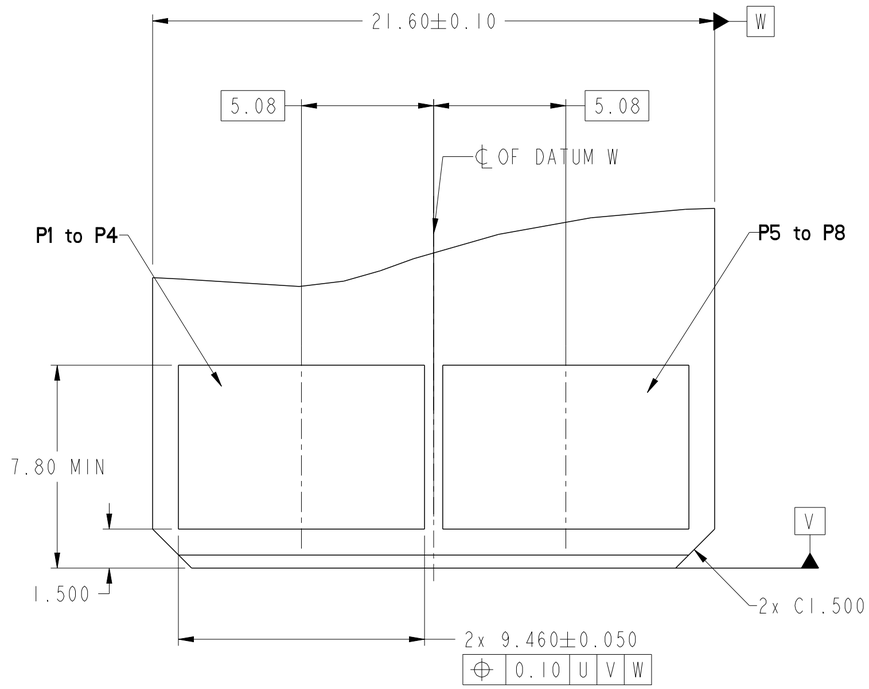

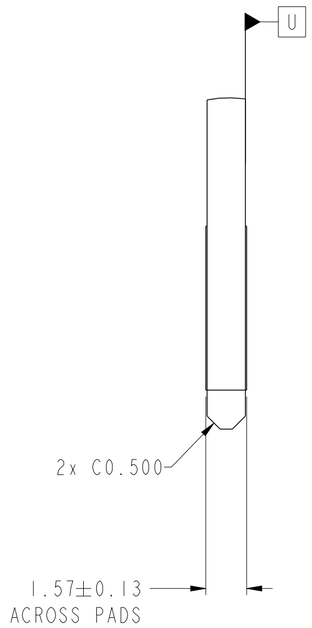

RECOMMENDED MATING BOARD LAYOUT
DIMENSION TOLERANCE IS ±0.05MM

spec ref	-			dr	Feng Zheng	2016/11/15	projection	MM	size A2 / scale 6:1
tolerance std ISO 406 ISO 1101	TOLERANCES UNLESS OTHERWISE SPECIFIED			eng	Feng Zheng	2016/12/08			ecn no -
				chr	Terris Liu	2016/12/08			
				appr	Pei-Ming Zheng	2016/12/08	product family		rel level Released
surface ISO 1302	linear	0.X	±0.5	Amphenol FCi	title HPCE VT RECT 4HP FOR LOW HF		dwg no 10141854		rev A
		0.XX	±0.25						
		0.XXX	±0.10						
	angular	0°	±2°		cat. no.		Product - Customer Drw		sheet 3 of 4

© 2016 AFCI

HPCE PART NUMBER (TABLE 3)				
PART NUMBER	TAIL TYPE	ORIENTATION KEY	DIM A TAIL LENGTH	DIM B RECOMMENDED BOARD THICKNESS
10141854-001HLF	SOLDER	NO	3.17 ±0.25	2.36±0.18
10141854-002HLF	PRESS-FIT	NO	3.17 ±0.25	1.57 MIN

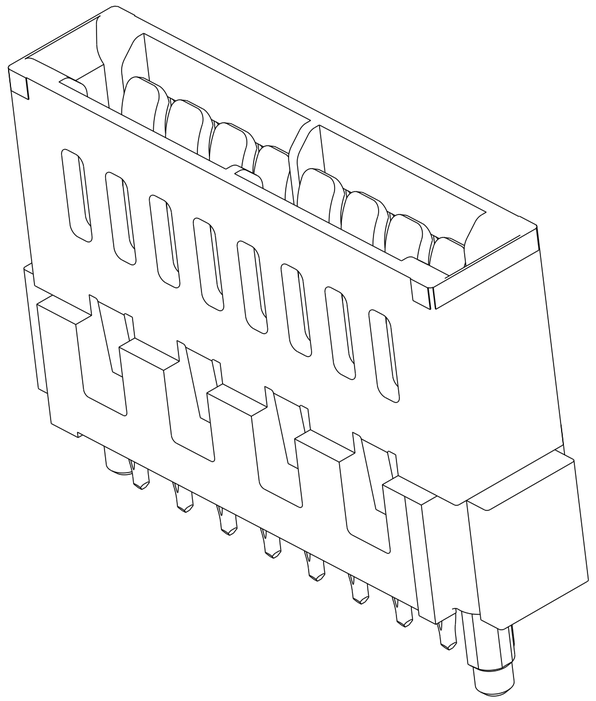

NOTES:

1. PRODUCT MARK:
   PART NUMBER AND DATE CODE TO BE MARKED ON THIS SURFACE .
   THE MARK CAN BE OMITTED IF THERE IS NOT ENOUGH SPACE ON THIS SURFACE.
2. MATERIALS:
   HOUSING : HIGH TEMPERATURE THERMOPLASTIC WITH GLASS FIBER, UL94V-0, BLACK.
   CONTACT : COPPER ALLOY.
3. CONTACT FINISH REF: GS-12-604 SECTION 5.2.
4. DENOTES CONNECTOR KEEP OUT ZONE.
5. ALL HOLE DIAMETERS ARE FINISHED HOLE SIZES.
6. MOUNTING HOLES ARE UNPLATED
   ∅2.40 +/- 0.1 FOR PRESS FIT TAILS
   ∅2.18 +/- 0.03 FOR SOLDER TAILS
7. THE HOUSING WILL WITHSTAND EXPOSURE TO 245°C PEAK TEMPERATURE FOR 10 SECONDS IN A WAVE SOLDER APPLICATION.
8. THIS PRODUCT MEETS EUROPEN UNION DIRECTIVES AND OTHER COUNTRY REGULATIONS AS DESCRIBED IN GS-47-0004.
9. PRODUCT SPECIFICATION : GS-12-604.
   APPLICATION SPECIFICATION : GS-20-128.
   PACKAGING SPECIFICATION: GS-14-937.
10. PRESS FIT APPLICATION TOOL DRAWING:10119453.

spec ref	-		dr	Feng Zheng	2016/11/15	projection	MM	size A2 / scale 6:1
tolerance std ISO 406 ISO 1101	TOLERANCES UNLESS OTHERWISE SPECIFIED		eng	Feng Zheng	2016/12/08			ecn no -
			chr	Terris Liu	2016/12/08			
			appr	Pei-Ming Zheng	2016/12/08	product family		rel level Released
surface ISO 1302	linear	0.X ±0.5	Amphenol FCi	title HPCE VT RECT 4HP FOR LOW HF			dwg no 10141854	rev A
		0.XX ±0.25						
		0.XXX ±0.10						
	angular	0° ±2°		cat. no.		Product - Customer Drw		sheet 4 of 4

© 2016 AFCI

Mouser Electronics

Authorized Distributor

Click to View Pricing, Inventory, Delivery & Lifecycle Information:

FCI / Amphenol:

10141854-001HLF