SAMZO | REAC/ROHS

| REV | ECN NO | DESRIPTION | DESIGN | APPROVAL | DATE |
|---|---|---|---|---|---|
| A1 | NEW | Replace frame | | | 2018.06.12 |

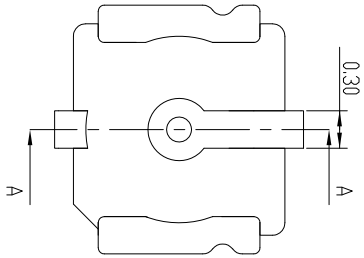


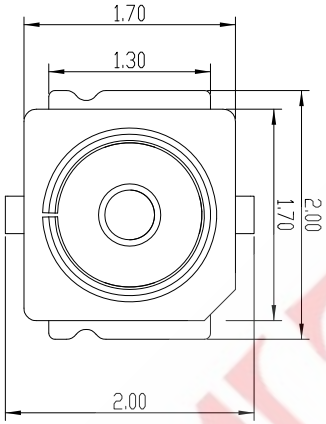


NOTES :

1.0. RATING :
- 1.1. VOITAGE :60 VAC (R.M.S.)
- 1.2. NOMINAL CHARACTERISTIC IMPEDANCE: 50 Ohm
- 1.3. APPLICABLE FREQUENCY: DC ~ 6GHz
- 1.4. VSWR: 1.3 MAX. (DC~3GHz), 1.5 MAX. (3~6GHz)
- 1.5. TEMPERATURE :-40°C TO +85°C

2.0. ALL DIMENSIONS SHOULD BE CONTROLED IN FAI.:

3.0. MARKED ▽* SHOULD BE CONTROLLED BY QIP.:

4.0. MATERIAL SEE BILL OF MATERIAL :

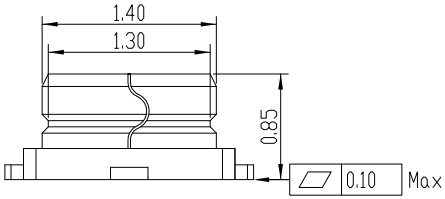


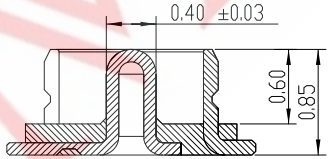


SECTION A-A

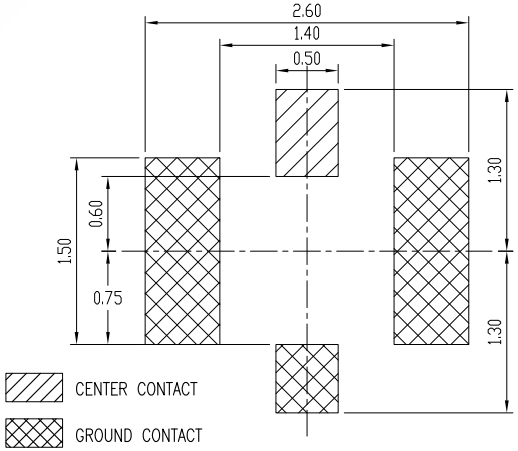


RECOMMENDED PCB LAYOUT

(TOLERANCE:±0.05)

IPEX-3-14-*-J-00

- Mold code编码:00模具编码
- Surface treatment镀层:镀金
- Plastic color塑胶颜色:B-黑色/N-本色
- Interface diameter口径:Φ1.4
- Product number编号:3代
- Product series系列:IPEX天线座

| ITEM | DESCRIPTION | MATERIAL | QTY | FINSH/COLOR |
|---|---|---|---|---|
| A | 塑胶 | LCP | 1 | ------ |
| B | 端子 | C5195 | 1 | 镀金 |
| A | 外壳 | C5195 | 1 | 镀金 |

| | | |
|---|---|---|
| DESIGN | WANGGUIFA | 2018.06.12 |
| CHECKED | ZHENGUILAN | 2018.06.12 |
| APPROVED | LILIANJIANG | 2018.06.14 |

| GENERAL TOLERANCE | |
|---|---|
| ⩾0~2< | ±0.15 |
| ⩾2~5< | ±0.25 |
| ⩾0~2< | ±0.15 |
| ⩾5 | ±0.35 |

FIRST VIEW

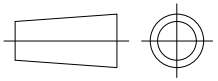

| SCALE | 1:1 | UNIT | mm |
|---|---|---|---|

The copyright belongs to samzo parts [China] Co., Ltd. please use the material after samzo parts agree to authorize. The final right of interpretation belongs to samzo parts.
WWW.KKK-JP.COM

SAMZO COMPONENTS

Electronic switch and connector manufacturer

TITLE: IPEX-3代 SMT Φ1.4 H0.85

DWG NO: IPEX-3-P001

PART NO: IPEX-3-1803001

MODEL NO: IPEX-3-14-*-J-00

NAME: IPEX 3P