THIS DRAWING IS UNPUBLISHED. RELEASED FOR PUBLICATION - ,- .
© COPYRIGHT - By - ALL RIGHTS RESERVED.

LOC	DIST
CM	0

REVISIONS

P	LTR	DESCRIPTION	DATE	DWN	APVD
	E1	REVISED PER ECR-15-007038	28SEP2015	NK	PQ

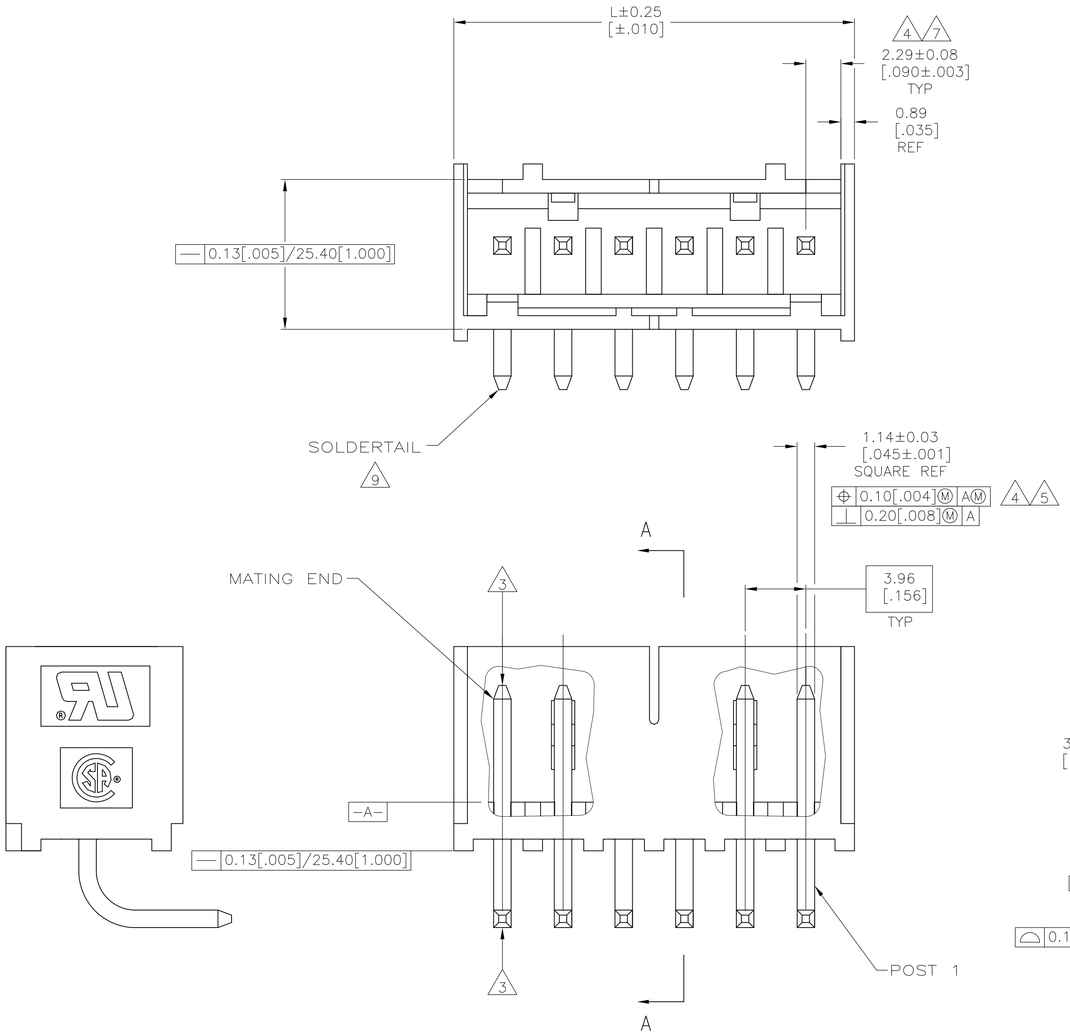

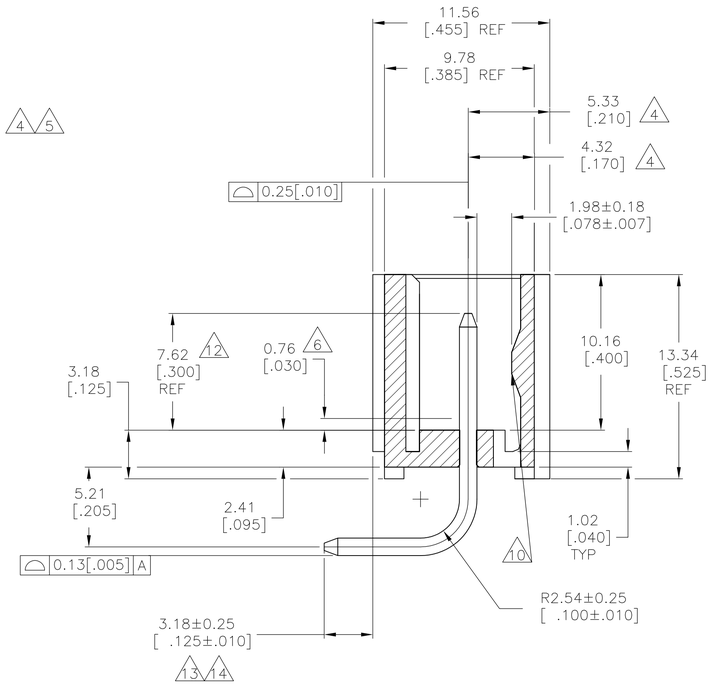

SECTION A—A

1. MATERIAL:
   HOUSING – THERMOPLASTIC POLYESTER,GLASS FILLED,UL94-0.
   POST – COPPER ALLOY
2. FINISH:
   HOUSING – BLACK
   POST – SEE NOTES 12, 13 AND 14 FOR PLATING.

3. POST TO WITHSTAND 3LBS (16N) MIN AXIAL FORCE IN THIS DIRECTION WITHOUT DISLODGING.
4. APPLIES AT -A- .
5. APPLIES WHEN HEADER IS STRAIGHT .
6. PLASTIC PROJECTIONS PERMITTED IN THIS ZONE.
7. COORDINATE DIMENSIONS APPLIES FROM CENTER OF ACTUAL FEATURE.
8. SOLDER SIDE OF BOARD IS SHOWN.
9. POST SOLDERTAIL MUST COMPLY WITH AMP SOLDERABILITY SPEC 109-11-2.
10. LATCH DETENT FEATURE APPEARS 1 PLACE ON EACH END OF PART (MAX OF 2 PER PART) ON ALL POSITIONS 4 THRU 12. THE LATCH APPEARS ONLY ONE PLACE ON 2 & 3 POSITION PARTS.
11. DIMENSIONS IN BRACKETS ARE IN INCHES.
12. PLATING: GOLD PLATE AREA, 0.00038 [.000015] GOLD OR 0.00008 [.000003] MIN GOLD FLASH OVER 0.00030 [.000012] PALLADIUM NICKEL, PER TE CONNECTIVITY'S DISCRETION, ALL SIDES, OVER NICKEL UNDERPLATE, 0.00127 [.000050] MIN, ALL SIDES AND ENTIRE LENGTH OF POST.
13. BRIGHT TIN LEAD (93/7) PLATE AREA 0.00381 – 0.0089 [.000150 – .000350] ALL FOUR SIDES, 3.18 [.125] MIN..
14. MATTE TIN PLATE AREA 0.00381 – 0.0089 [.000150 – .000350] ALL FOUR SIDES, 3.18 [.125] MIN..
15. OBSOLETE PARTS: OBSOLETE CIS STREAMLINING PER D.RENAUD/D.SINISI
16. OBSOLETE PART NUMBER

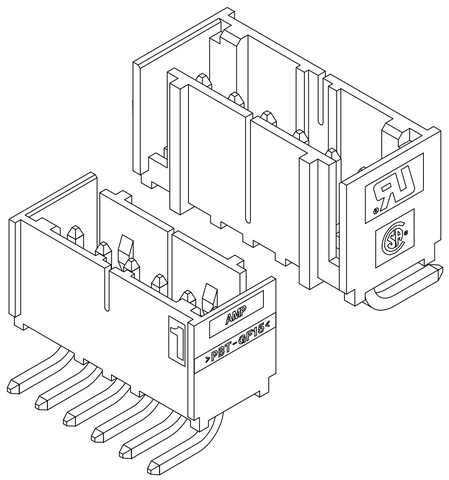

3-DIMENSIONAL MODEL
NTS

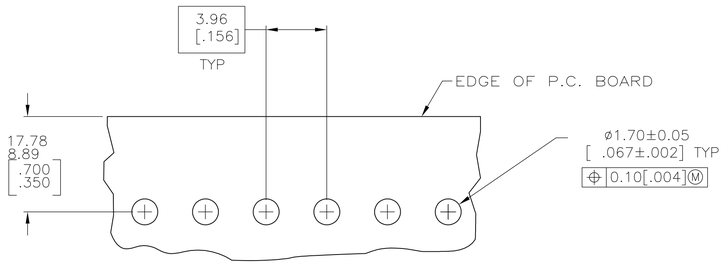

RECOMMENDED MOUNTING HOLE PATTERN
FOR 1.57[.062] THICK P.C. BOARD 8

647141-6 SHOWN

	PLATING	MM	IN	NO. OF POSN	PART NUMBER
		L DIM			
	12 14	49.94	1.966	12	16 ~~3-647141-2~~
		45.97	1.810	11	16 ~~3-647141-1~~
		42.01	1.654	10	16 ~~3-647141-0~~
		38.05	1.498	9	16 ~~2-647141-9~~
		34.09	1.342	8	16 ~~2-647141-8~~
		30.12	1.186	7	16 ~~2-647141-7~~
		26.16	1.030	6	16 ~~2-647141-6~~
		22.20	.874	5	16 ~~2-647141-5~~
		18.24	.718	4	16 ~~2-647141-4~~
		14.27	.562	3	16 ~~2-647141-3~~
		10.31	.406	2	16 ~~2-647141-2~~
15 SUPERSEDED BY 3-647141-2	12 13	49.94	1.966	12	~~1-647141-2~~
15 SUPERSEDED BY 3-647141-1		45.97	1.810	11	~~1-647141-1~~
15 SUPERSEDED BY 3-647141-0		42.01	1.654	10	~~1-647141-0~~
15 SUPERSEDED BY 2-647141-9		38.05	1.498	9	~~647141-9~~
15 SUPERSEDED BY 2-647141-8		34.09	1.342	8	~~647141-8~~
15 SUPERSEDED BY 2-647141-7		30.12	1.186	7	~~647141-7~~
15 SUPERSEDED BY 2-647141-6		26.16	1.030	6	~~647141-6~~
15 SUPERSEDED BY 2-647141-5		22.20	.874	5	~~647141-5~~
15 SUPERSEDED BY 2-647141-4		18.24	.718	4	~~647141-4~~
15 SUPERSEDED BY 2-647141-3		14.27	.562	3	~~647141-3~~
		10.31	.406	2	647141-2

THIS DRAWING IS A CONTROLLED DOCUMENT.

DIMENSIONS: mm [INCHES]

TOLERANCES, UNLESS OTHERWISE SPECIFIED:
0 PLC ± -
1 PLC ± -
2 PLC ± -
3 PLC ± .005
4 PLC ± -
ANGLES ± -

MATERIAL -
FINISH -

DWN B. LEWIS 16JUN98
CHK R. SWING 16JUN98
APVD D. CLARK 16JUN98
PRODUCT SPEC -
APPLICATION SPEC -
WEIGHT -

TE Connectivity

NAME
MTA-156 SHROUDED HEADER ASSEMBLY, RIGHT ANGLE FRONT BEND .045 SQUARE POST,.000015 GOLD,W/O RETENTION PEG

SIZE	CAGE CODE	DRAWING NO	RESTRICTED TO
A1	00779	C-647141	-

CUSTOMER DRAWING | SCALE 5:1 | SHEET 1 OF 1 | REV E1

4805 (3/11)

Mouser Electronics

Authorized Distributor

Click to View Pricing, Inventory, Delivery & Lifecycle Information:

TE Connectivity:

2-647141-2