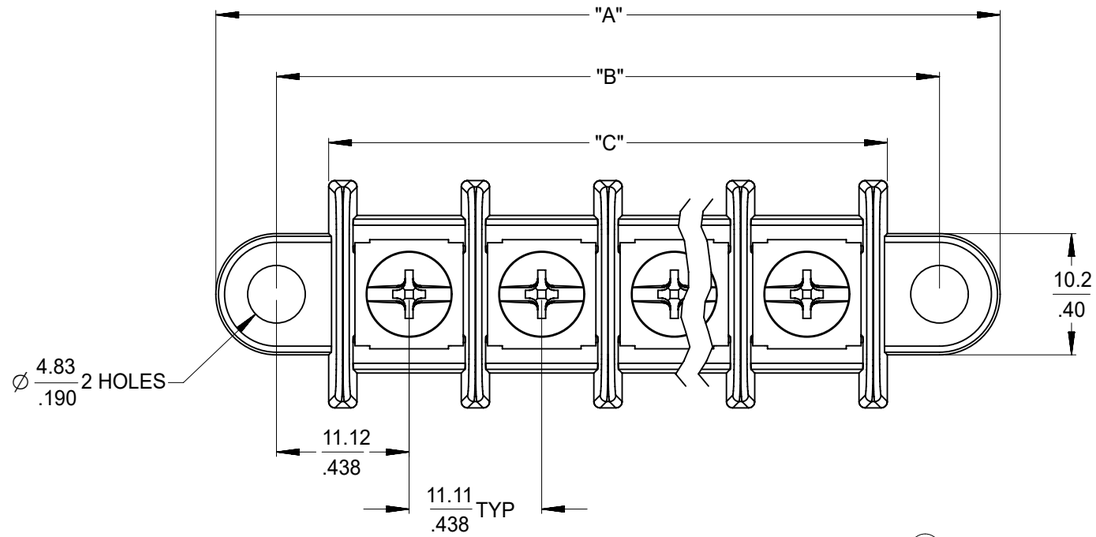

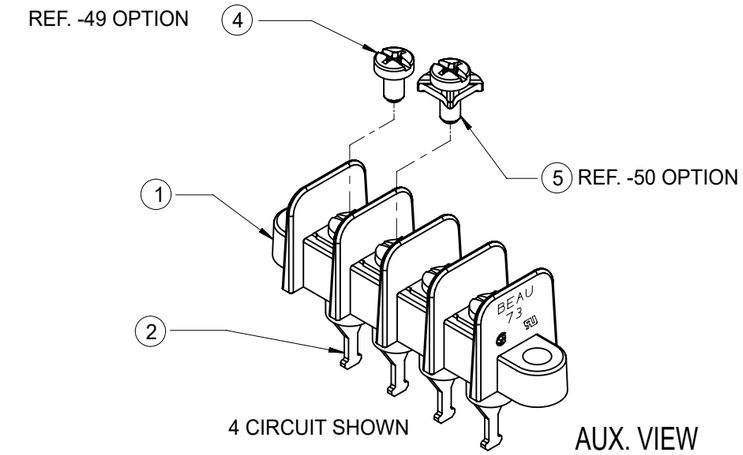

AUX. VIEW
SCALE 1:1

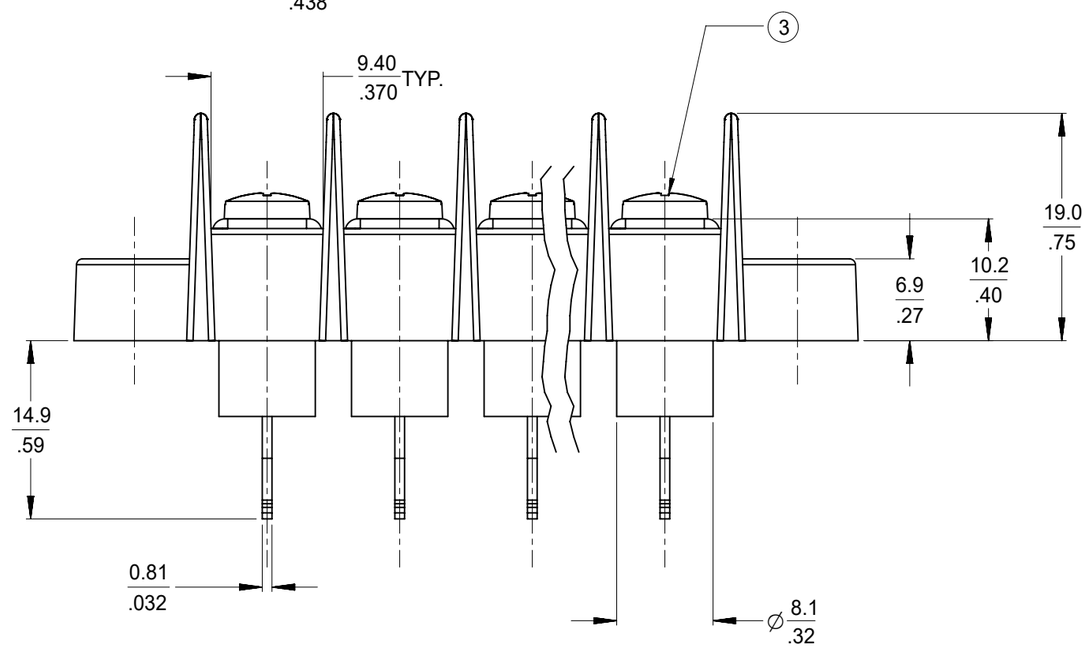

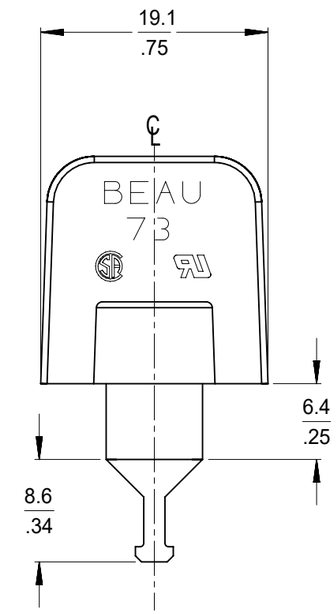

NOTES:
1. MATERIAL: SEE TABLE.
2. FINISHES: SEE TABLE.
3. PRODUCT SPECIFICATION: NOT REQUIRED.
4. "XX" REFERS TO QUANTITY OF CIRCUITS.
5. ROHS COMPLIANT.

ITEM	QTY.	DESCRIPTION	MATERIAL	FINISH
5	XX	SCREW, #6-32 X .250 PAN HEAD PH-SL W/SQ WASHER (-50 OPT.)	STEEL	ZN, CLEAR CHROMATE
4	XX	SCREW, #6-32 X .250 PAN HEAD PHIL-SLOT (-49 OPT.)	BRASS	NICKEL PLATE
3	XX	SCREW, #6-32 X .250 BINDING HEAD PHIL-SLOT (STD)	STEEL	ZN, CLEAR CHROMATE
2	XX	TERMINAL TURRET 6C SN/B	BRASS	TIN PLATE
1	1	INSULATOR, MOLDED MTG, INSUL. BASE	POLYESTER (PBT)	BLACK

DOCUMENT STATUS	P1	RELEASE DATE	2024/08/13 06:11:42

THIS DRAWING CONTAINS INFORMATION THAT IS PROPRIETARY TO MOLEX ELECTRONIC TECHNOLOGIES, LLC AND SHOULD NOT BE USED WITHOUT WRITTEN PERMISSION

DIMENSION UNITS	SCALE
mm/IN	2:1

GENERAL TOLERANCES (UNLESS SPECIFIED)

	MM	INCH
4 PLACES	±	±
3 PLACES	±	± 0.005
2 PLACES	± 0.13	± 0.01
1 PLACE	± 0.3	±
0 PLACES	±	±
ANGULAR TOL	± 2.0 °	

DRAFT WHERE APPLICABLE MUST REMAIN WITHIN DIMENSIONS

CURRENT REV DESC: REMOVED OBSOLETED PART NUMBERS AS PER PCN#515181.

EC NO: 793827
DRWN: RAVINR1 2024/06/03
CHK'D: GGA 2024/08/13
APPR: GGA 2024/08/13

INITIAL REVISION:
DRWN: JENCINAS 2011/10/31
APPR: JMACNEIL 2011/11/10

THIRD ANGLE PROJECTION | DRAWING: B-SIZE | SERIES: 38730

molex

11.11/.438 SR BTS ASSY, INSULATED SOLDER TURRET

PRODUCT CUSTOMER DRAWING

DOCUMENT NUMBER	DOC TYPE	DOC PART	REVISION
SD-38730-009	PSD	001	B

MATERIAL NUMBER	CUSTOMER	SHEET NUMBER
SEE TABLE	GENERAL MARKET	1 OF 2

FORMAT: Eng-lega-master-tb-prod-B
REVISION: E1
DATE: 2021/05/01

# OF CIRC. "XX"	DIM. "A"		DIM. "B"		DIM. "C"		MATERIAL NO. (STD)	MATERIAL NO. (-49)	MATERIAL NO. (-50)
02	43.5	[1.71]	33.34	[1.313]	24.5	[0.97]	387303102	----------	----------
04	65.7	[2.59]	55.56	[2.188]	46.8	[1.84]	387303104	----------	----------
05	76.8	[3.03]	66.68	[2.625]	57.9	[2.28]	387303105	----------	----------
06	87.9	[3.46]	77.79	[3.063]	69.0	[2.72]	387303106	387303406	----------
07	99.1	[3.90]	88.90	[3.500]	80.1	[3.15]	387303107	----------	387303707
08	110.2	[4.34]	100.01	[3.938]	91.2	[3.59]	387303108	----------	----------
10	132.4	[5.21]	122.24	[4.813]	113.4	[4.47]	387303110	----------	----------
11	143.5	[5.65]	133.35	[5.250]	124.6	[4.90]	387303111	----------	----------
12	154.6	[6.09]	144.46	[5.688]	135.7	[5.34]	387303112	387303412	----------
13	165.7	[6.53]	155.58	[6.125]	146.8	[5.78]	----------	387303413	387303713
14	176.8	[6.96]	166.69	[6.563]	157.9	[6.22]	387303114	387303414	----------
15	188.0	[7.40]	177.80	[7.000]	169.0	[6.65]	----------	387303415	387303715
16	199.1	[7.84]	188.91	[7.438]	180.1	[7.09]	387303116	387303416	387303716
17	210.2	[8.28]	200.03	[7.875]	191.2	[7.53]	----------	----------	387303717
19	232.4	[9.15]	222.25	[8.750]	213.5	[8.40]	387303119	387303419	387303719
20	243.5	[9.59]	233.36	[9.188]	224.6	[8.84]	387303120	387303420	----------
21	254.6	[10.03]	244.48	[9.625]	235.7	[9.28]	387303121	387303421	387303721
22	265.7	[10.46]	255.59	[10.063]	246.8	[9.72]	----------	----------	387303722
23	276.9	[10.90]	266.70	[10.500]	257.9	[10.15]	387303123	387303423	----------
24	288.0	[11.34]	277.81	[10.938]	269.0	[10.59]	----------	387303424	387303724
25	299.1	[11.78]	288.93	[11.375]	280.1	[11.03]	----------	387303425	----------
26	310.2	[12.21]	300.04	[11.813]	291.2	[11.47]	----------	387303426	387303726
27	321.3	[12.65]	311.15	[12.250]	302.4	[11.90]	387303127	387303427	387303727
28	332.4	[13.09]	322.26	[12.688]	313.5	[12.34]	----------	387303428	387303728
29	343.5	[13.53]	333.38	[13.125]	324.6	[12.78]	387303129	387303429	387303729
30	354.6	(13.96)	344.49	[13.563]	335.7	[13.22]	----------	----------	387303730

THIS DRAWING CONTAINS INFORMATION THAT IS PROPRIETARY TO MOLEX ELECTRONIC TECHNOLOGIES, LLC AND SHOULD NOT BE USED WITHOUT WRITTEN PERMISSION

DIMENSION UNITS: mm/IN
SCALE: 2:1

GENERAL TOLERANCES (UNLESS SPECIFIED)

	MM	INCH
4 PLACES	±	±
3 PLACES	±	± 0.005
2 PLACES	± 0.13	± 0.01
1 PLACE	± 0.3	±
0 PLACES	±	±
ANGULAR TOL	± 2.0 °	

DRAFT WHERE APPLICABLE MUST REMAIN WITHIN DIMENSIONS

CURRENT REV DESC: REMOVED OBSOLETED PART NUMBERS AS PER PCN#515181.

EC NO: 793827
DRWN: RAVINR1 2024/06/03
CHK'D: GGA 2024/08/13
APPR: GGA 2024/08/13

INITIAL REVISION:
DRWN: JENCINAS 2011/10/31
APPR: JMACNEIL 2011/11/10

THIRD ANGLE PROJECTION | DRAWING: B-SIZE | SERIES: 38730

molex

11.11/.438 SR BTS ASSY, INSULATED SOLDER TURRET

PRODUCT CUSTOMER DRAWING

DOCUMENT NUMBER	DOC TYPE	DOC PART	REVISION
SD-38730-009	PSD	001	B

MATERIAL NUMBER	CUSTOMER	SHEET NUMBER
SEE TABLE	GENERAL MARKET	2 OF 2

DOCUMENT STATUS	P1	RELEASE DATE	2024/08/13 06:11:42

FORMAT: Eng-lega-master-tb-prod-B
REVISION: E1
DATE: 2021/05/01