KYCON, Inc. 1810 Little Orchard Street, San Jose, CA 95125 (408)494-0330

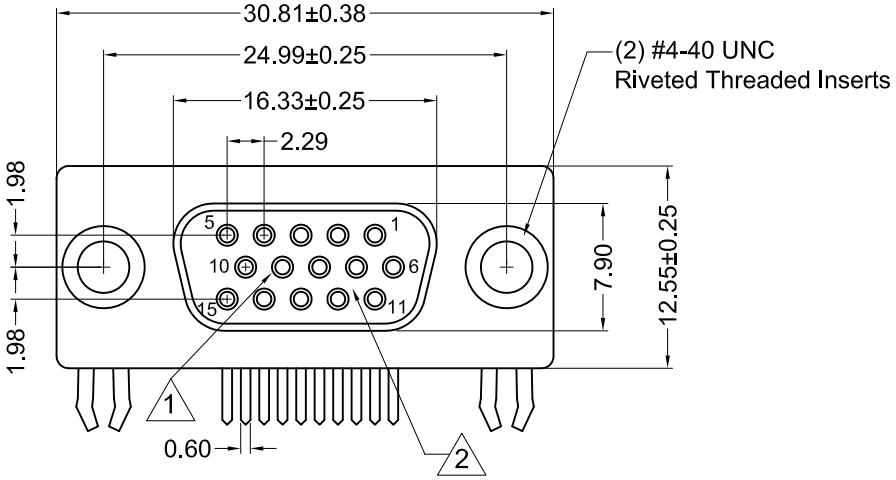

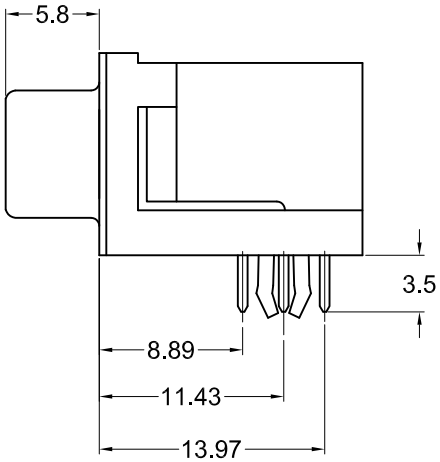

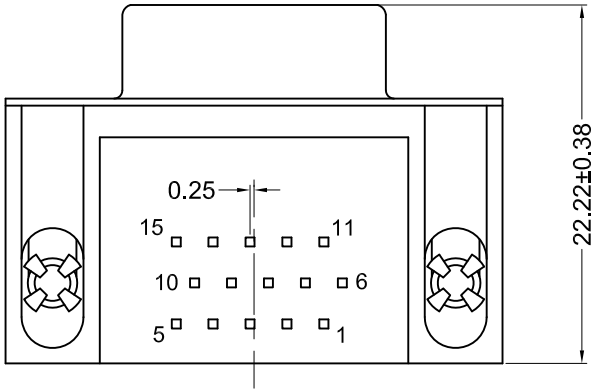

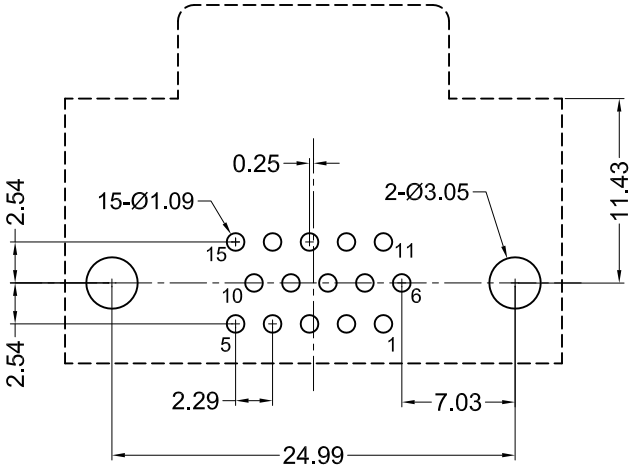

Recommended PCB Layout
(Bottom View)

Material and Finish

Shell: Steel, tin plated

Insulator: PBT thermoplastic with glass-fiber reinforcement, UL94V-0 rated
Color: Blue

Contact Material:
Socket - Phosphor Bronze

Contact Plating Options:

Standard: gold flash on mating end, tin on termination end, nickel underplate on entire contact

15 Option: 15u" gold on mating end, tin on termination end, nickel underplate on entire contact

30 Option: 30u" gold on mating end, tin on termination end, nickel underplate on entire contact

Electrical Specifications

Rated Current: 1.5A

Rated Voltage: 30Vac

Insulation Resistance:
more than 1000 megohms at 500V DC

Contact Resistance:
13 milliohms max.

Dielectric Withstanding Voltage:
1000V for 1 minute

Operating Temperature:
-55°C to +75°C

Part Number	Contact Area Plating Finish
K66X-E15S-NV-VESA	Gold Flash (standard)
K66X-E15S-NV15VESA	15u" Gold (15 option)
K66X-E15S-NV30VESA	30u" Gold (30 option)

1. Contact #9 Recessed 0.050" [1.27mm] Shorter contact allows last mate/ first break on 5V supply voltage

2. Blue body color signifies 5v capability and full feature AccessBus capability

RoHS COMPLIANT

E140125 LR78160

Tolerances
X.X ± 0.25
X.XX ± 0.15
Unless Stated Otherwise

REV.	DATE	DESCRIPTION	REV. BY	CHK. BY
A1	10/07/05	New Drawing	R. Aguirre	X. Xxxxxxx
A2	03/10/08	ECO # 07-049	S. Vien	H. Ma
A3	12/11/08	ECO# 08-084	S. Vien	H. MA
A4	06/27/14	ECO#14-027	H. MA	P. DalCanto
A5	11/5/14	Correct Color	H. MA	C. Furumasu

DRAWN BY	DATE
R. Aguirre	10/07/05
UNITS	
mm	

K66X-E15S-NV-VESA

HD, D-Sub, VESA Standard, RoHS Compliant

Female, Pin #9 Recessed, NV Boardlocks

KYCON