PRODUCT NUMBER
SEE SHEET 3

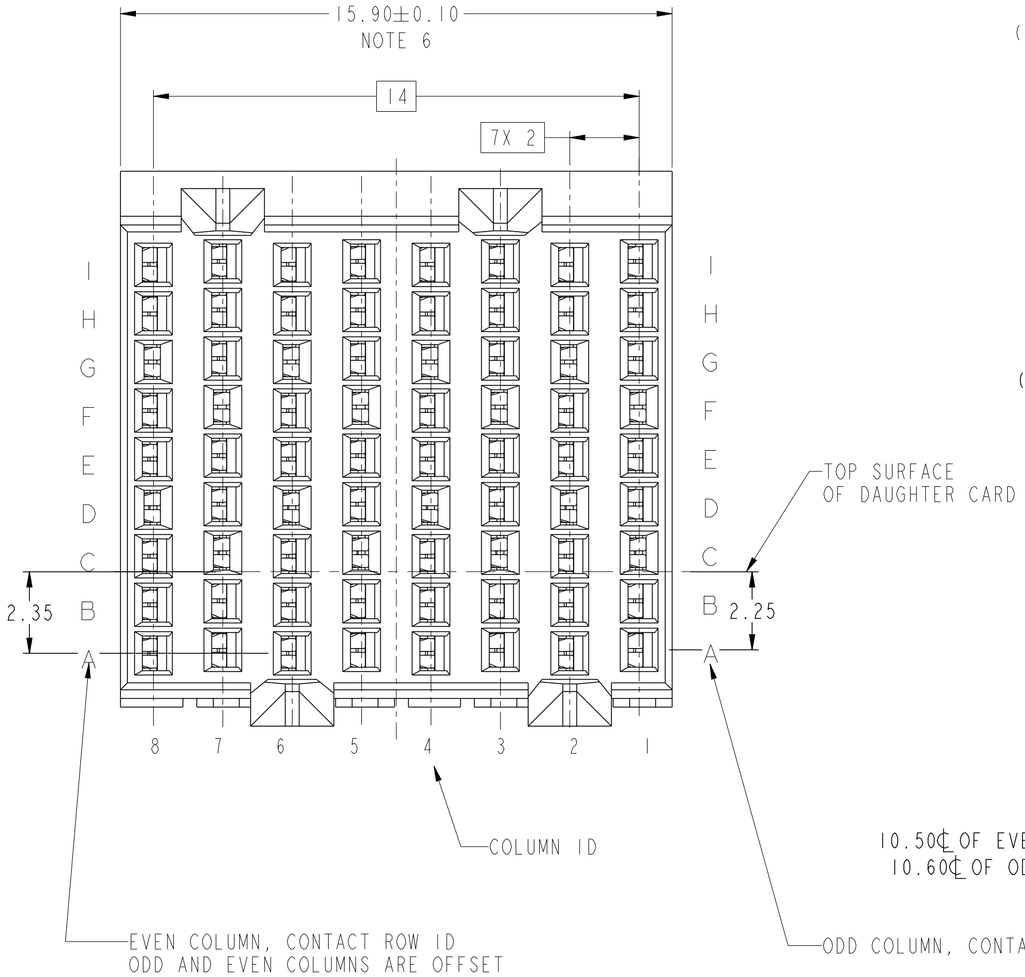

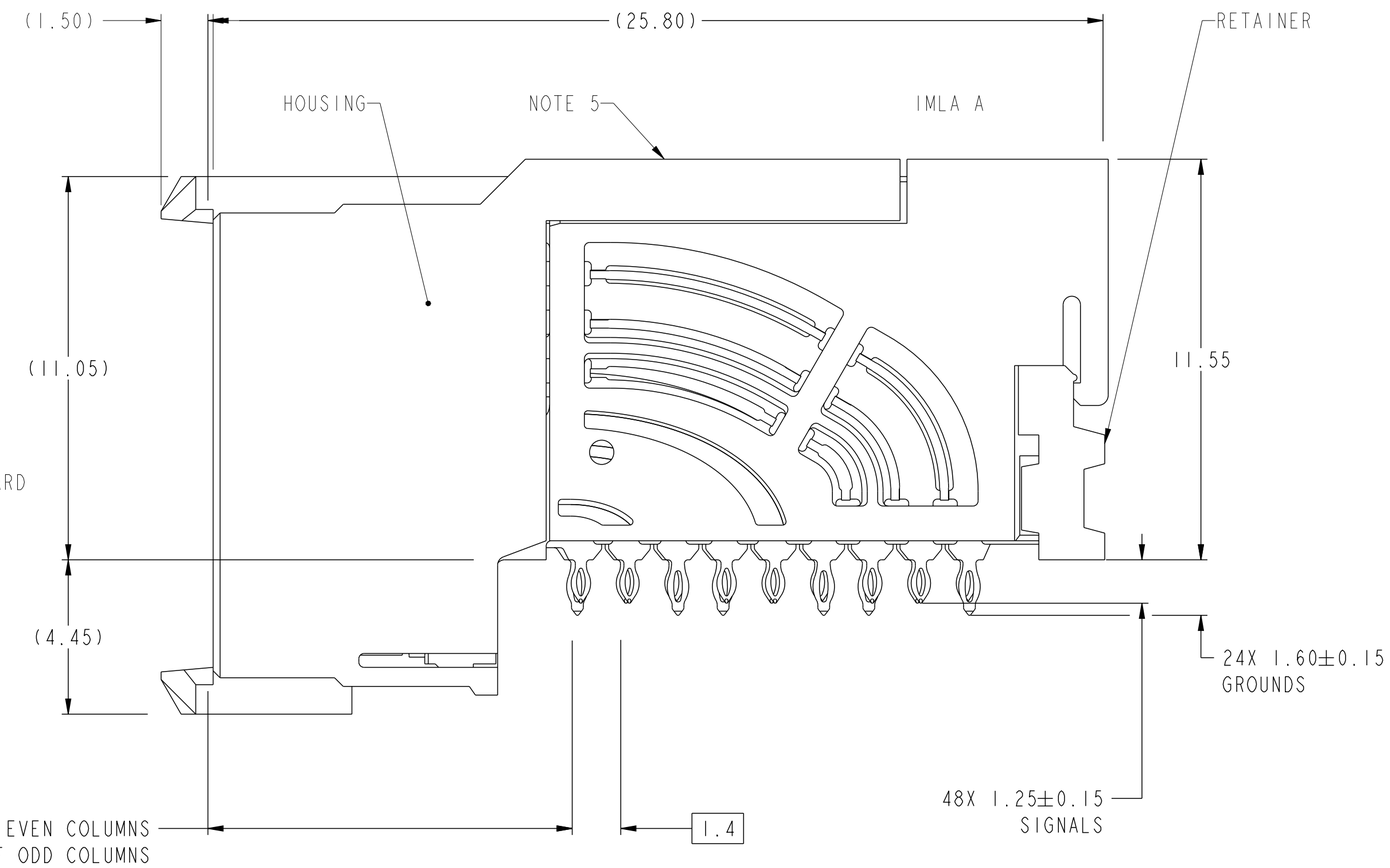

spec ref	---			dr	Lin-Soe Ngwe	2013/03/20	projection	MM	size A2 / scale 1:1
tolerance std ASME Y14.5M	TOLERANCES UNLESS OTHERWISE SPECIFIED			eng	Jeny Ren	2015/02/04			ecn no ELX-DG-20165-1
				chr	-	-			
				appr	Collins Lu	2015/02/06	product family	AirMax VSE	rel level Released
surface -	linear	0.X	±.3	title	AIRMAX VS2 R.A. RECEPTACLE ASS'Y, 3 PAIR, 72 POS, 8 IMLA, 16MM, Small PF		dwg no	10124756	rev B
		0.XX	±.10						
		0.XXX	±.050						
	angular	0°	±°	www.fci.com	cat. no. -		Product - Customer Drw		sheet 1 of 3

Copyright FCI.

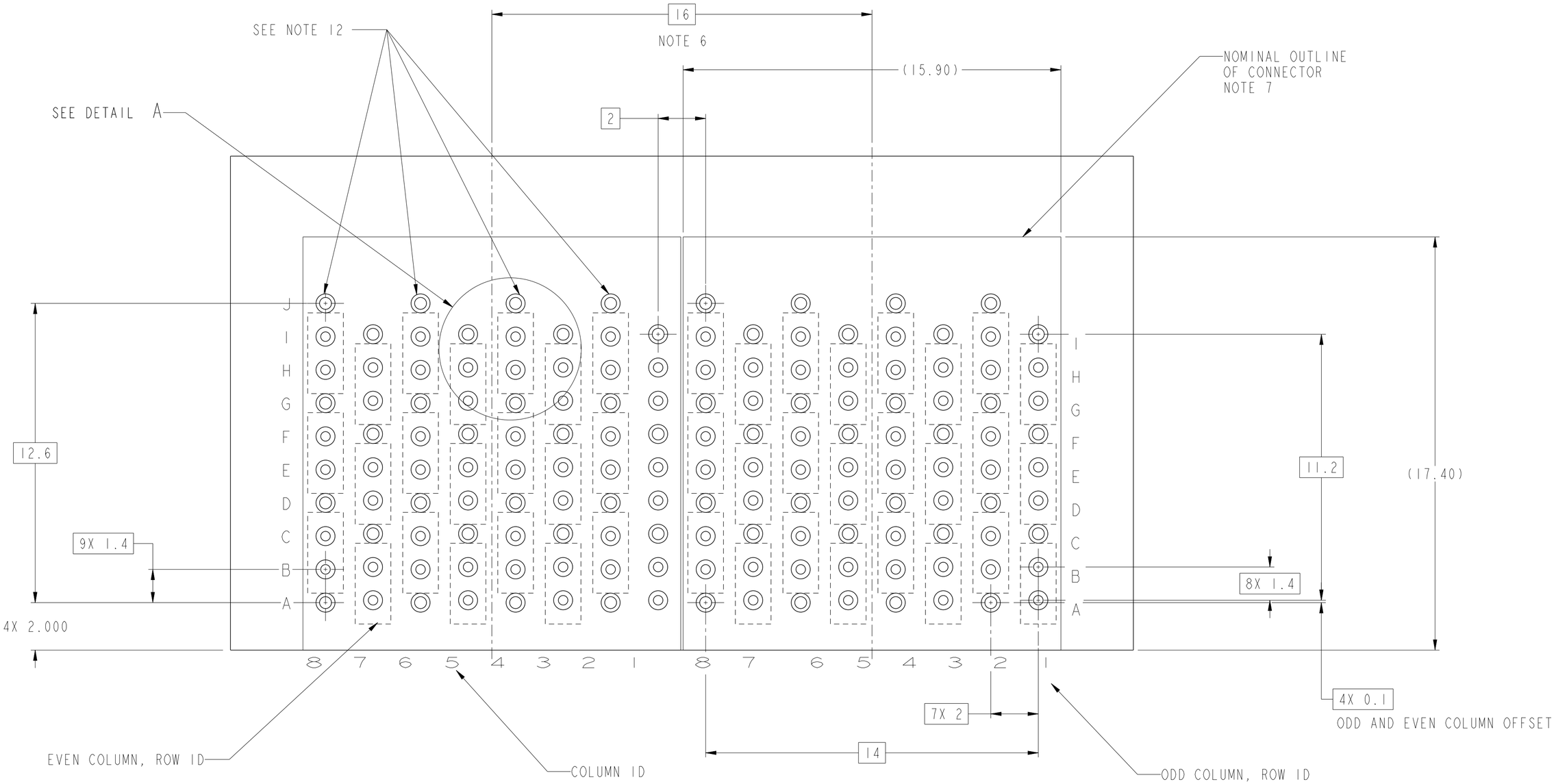

RECOMMENDED PCB LAYOUT
FOR DIFFERENTIAL APPLICATIONS
COMPONENT SIDE
(TWO ADJACENT FOOTPRINTS SHOWN)
NOTES 6,8,& 11

Copyright FCI.

spec ref	---			dr	Lin-Soe Ngwe	2013/03/20	projection	MM
tolerance std ASME Y14.5M	TOLERANCES UNLESS OTHERWISE SPECIFIED			eng	Jeny Ren	2015/02/04		
				chr	-	-		
				appr	Collins Lu	2015/02/06		
surface -	linear	0.X	±.3	title	AIRMAX VS2 R.A. RECEPTACLE ASS'Y, 3 PAIR, 72 POS, 8 IMLA, 16MM, Small PF		dwg no	10124756
		0.XX	±.10					
		0.XXX	±.050					
	angular	0°	±°	www.fci.com	cat. no.	-	Product - Customer Drw	

size A2	scale 1:1		
ecn no	ELX-DG-20165-1		
product family	AirMax VSE	rel level	Released
rev	B	sheet 2 of 3	

Pro/E File - REV C - 2009-06-09

PRODUCT NUMBER	PRESS-FIT TAIL PLATING TYPE
10124756-101	TIN/LEAD ALLOY OVER NICKEL
10124756-101LF	TIN OVER NICKEL (LEAD FREE)

1 - CONNECTOR MATERIALS:
HOUSING: HIGH TEMP THERMOPLASTIC, NATURAL, UL94-V0
IMLA PLASTIC: HIGH TEMP THERMOPLASTIC, BLACK, UL94-V0
CONTACT: COPPER ALLOY
ORGANIZER: HIGH TEMP THERMOPLASTIC, WHITE, UL94-V0

2 - CONTACT PLATING:
SEPARABLE INTERFACE:
PERFORMANCE BASED PLATING, QUALIFIED TO MEET THE REQUIREMENTS OF FCI PRODUCT SPECIFICATION GS-12-0956 INCLUDING TELCORDIA GR-1217-CORE (NOVEMBER 1995) CENTRAL OFFICE TEST SEQUENCE

PRESS-FIT TAILS: SEE TABLE

3 - PRODUCT SPECIFICATION: GS-12-0956

4 - APPLICATION SPECIFICATION: GS-20-0305.

5 - PRODUCT MARKING, (PART NUMBER & LOT CODE), ON THIS SURFACE.

6 - THE MINIMUM CENTERLINE SPACING BETWEEN ADJACENT MODULES IS 16.0 MM.

7 - CONNECTOR OUTLINE MAY BE SCREEN PRINTED ONTO CUSTOMER PCB TO BE USED AS A GUIDE FOR MANUAL CONNECTOR PLACEMENT.

8 - REFER TO CUSTOMER DRAWING 10104444 FOR INFORMATION ON PCB HOLE DIAMETERS AND PLATING OPTIONS

9 - LEAD FREE PRODUCT MEETS THE EUROPEAN UNION DIRECTIVES & OTHER COUNTRY REGULATIONS AS DESCRIBED IN GS-22-008

10 - PACKAGING MEETS GS-14-920 LEAD FREE LABELING SPECIFICATION.

11 - GROUND CONTACTS (C,F, AND I IN ODD COLUMNS AND A, D, AND G, EVEN COLUMNS) REQUIRE (∅0.500) FINISHED HOLES. SIGNAL LOCATIONS REQUIRE (∅0.400) FINISHED HOLES.

12 - THESE OUTER VIAS (J) ARE OPTIONAL. WHILE NO CONNECTOR EONS ARE PRESSED INTO THESE HOLES WE RECCOMMEND (∅0.500) FINISHED HOLES AT THESE LOCATIONS TO PROVIDE GROUND SYMMETRY THROUGH THE PCB.

13- A (B) SYMBOL WILL BE NEXT TO ANY DIMENSION, VIEW OR NOTE, WHICH HAS BEEN MODIFIED WITH THE CURRENT DRAWING REVISION.

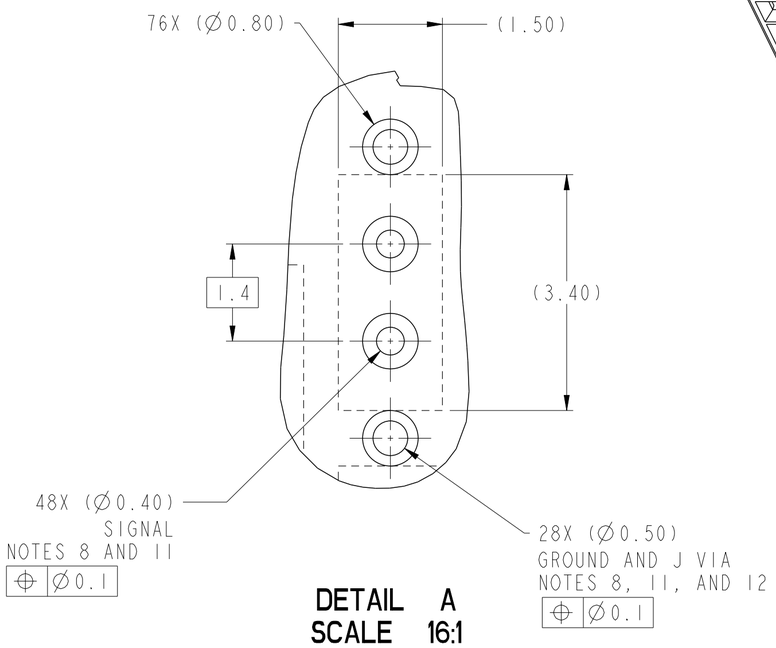

DETAIL A
SCALE 16:1

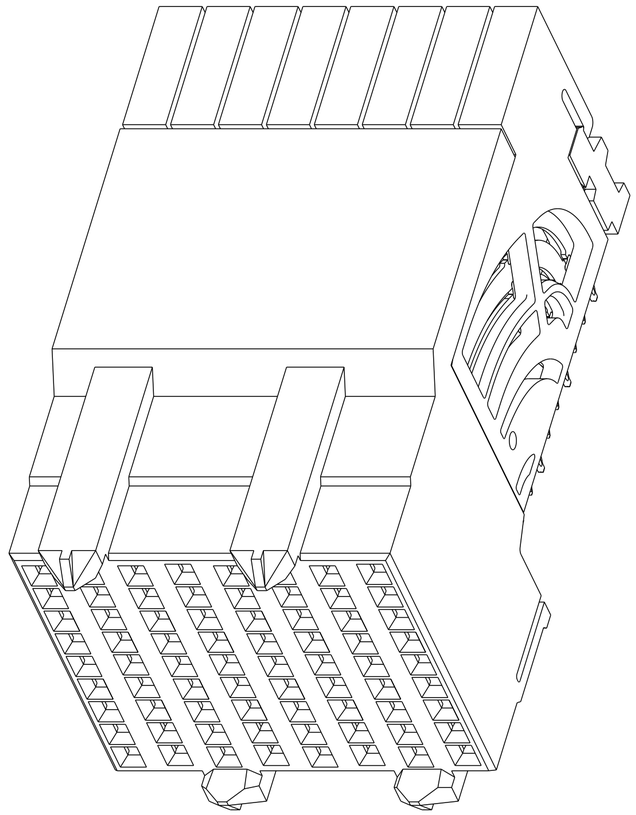

10124756-101 OR -101LF

spec ref	---	dr	Lin-Soe Ngwe	2013/03/20	projection	MM	size A2 / scale 4:1
tolerance std ASME Y14.5M	TOLERANCES UNLESS OTHERWISE SPECIFIED	eng	Jeny Ren	2015/02/04			ecn no ELX-DG-20165-1
		chr	-	-			
		appr	Collins Lu	2015/02/06	product family		rel level Released
surface ✓	linear 0.X ±.3; 0.XX ±.10; 0.XXX ±.050; angular 0° ±°	www.fci.com	title: AIRMAX VS2 R.A. RECEPTACLE ASS'Y, 3 PAIR, 72 POS, 8 IMLA, 16MM, Small PF	cat. no.	dwg no 10124756	Product - Customer Drw	rev B / sheet 3 of 3

Copyright FCI.

Mouser Electronics

Authorized Distributor

Click to View Pricing, Inventory, Delivery & Lifecycle Information:

FCI / Amphenol:

10124756-101LF