EV-VN7E010AJ

Data brief

VN7E010AJ evaluation board

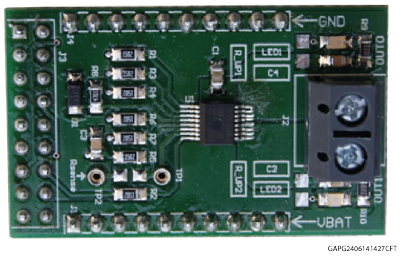

Features

Max transient supply voltage	V_{CC}	40 V
Operating voltage range	V_{CC}	4 to 28 V
Typ. on-state resistance (per Ch)	R_{ON}	10.5 mΩ
Current limitation (typ)	I_{LIMH}	88 A
Stand-by current (max)	I_{STBY}	0.5 µA
Minimum cranking supply voltage (V_{CC} decreasing)	$V_{USD_cranking}$	2.85 V

- Simple single IC application board dedicated for VN7E010AJ
- Provides electrical connectivity and thermal heat-sinking for easy prototyping
- General device features
  - Extreme low voltage operation for deep cold cranking applications (compliant to LV124, revision 2013)
  - Single channel smart high-side driver with CurrentSense analog feedback
  - Very low standby current
  - Compatible with 3 V and 5 V CMOS outputs
- Diagnostic functions
  - Analog feedback of load current with high precision proportional current mirror
  - Overload and short to ground (power limitation) indication
  - Thermal shutdown indication
  - OFF-state open-load detection
  - Output short to V_{CC} detection
  - Sense enable/disable
- Protections
  - Undervoltage shutdown
  - Overvoltage clamp
  - Load current limitation
  - Self limiting of fast thermal transients
  - Configurable latch-off on overtemperature or power limitation with dedicated fault reset pin
  - Loss of ground and loss of V_{CC}
  - Reverse battery with external components
  - Electrostatic discharge protection

Product status link
EV-VN7E010AJ

Product summary	
EV-VN7E010AJ	VN7E010AJ evaluation board

Applications

- Automotive resistive, inductive and capacitive loads
- Protected supply for ADAS systems: radars and sensors
- Automotive headlamp

1 Description

This board provides you an easy way to connect STMicroelectronics VIPower M0-7 technology into your existing system.

The board comes pre-assembled with VN7E010AJ high-side driver. On board minimum set of electrical components (as for device datasheet recommendation) is enabling the user to directly connect the load, the power supply and the microcontroller without any additional effort in external component design and connection.

The VN7E010AJ is a single channel high-side driver manufactured using ST proprietary VIPower technology and housed in PowerSSO-16 package. The device is designed to drive 12 V automotive grounded loads through a 3 V and 5 V CMOS-compatible interface, providing protection and diagnostics.

The device integrates advanced protective functions such as load current limitation, overload active management by power limitation and overtemperature shutdown with configurable latch-off.

A $\overline{\text{FaultRST}}$ pin unlatches the output in case of fault or disables the latch-off functionality.

A dedicated multifunction multiplexed analog output pin delivers sophisticated diagnostic functions including high precision proportional load current sense, supply voltage feedback and chip temperature sense, in addition to the detection of overload and short circuit to ground, short to VCC and OFF-state open-load. A sense enable pin allows OFF-state diagnosis to be disabled during the module low-power mode as well as external sense resistor sharing among similar devices.

Figure 1. Evaluation board schematic

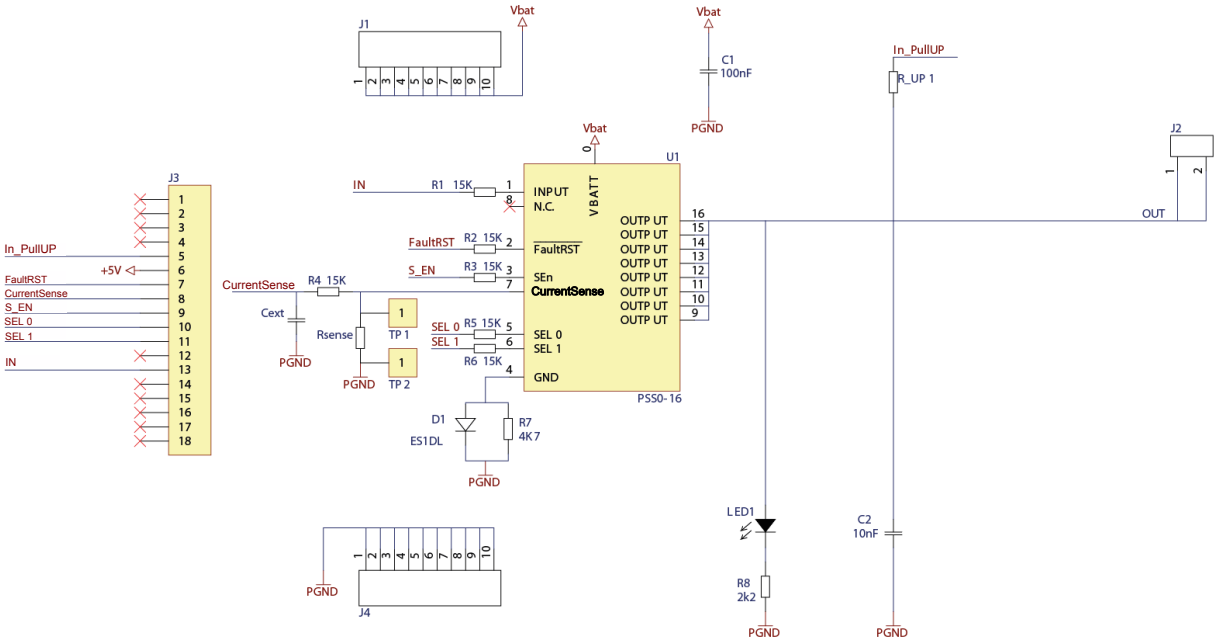

GAPG300820191223MT

2 Board connections

Figure 2. Evaluation board connections shows the placement of the connectors to be used to supply the evaluation board, to connect the load and to control the functionality and diagnostic of the device.

Figure 2. Evaluation board connections

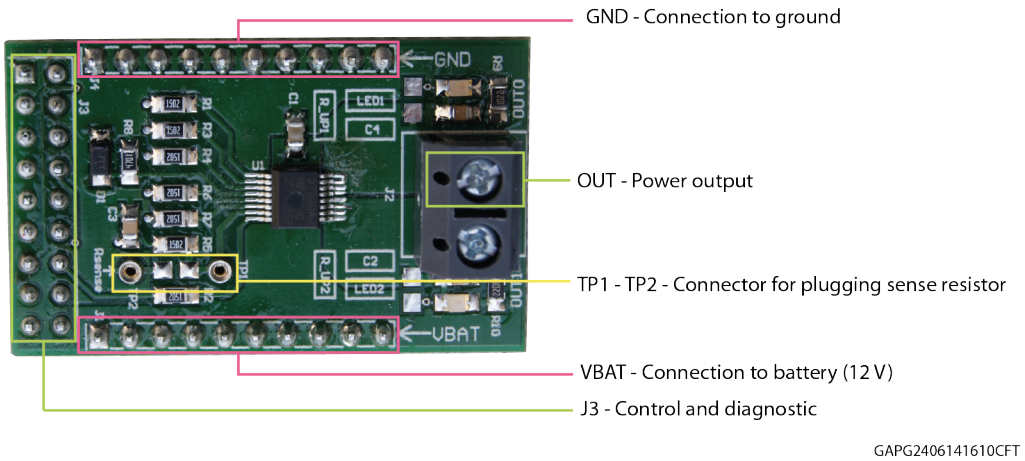

Table 1. J3 connector: pin functions

Connector	Pin number	Pin name	Pin function
J3	1…4	N/A	Not connected
J3	5	IN_PullUP	Connection to optional external pull-up resistor for open load detection in off-state
J3	6	+5V	5 V Power Supply
J3	7	$\overline{\text{FaultRST}}$	Active low compatible with 3 V and 5 V CMOS outputs pin; it unlatches the output in case of fault; If kept low, sets the outputs in auto-restart
J3	8	CurrentSense	Analog current sense output pin; delivers a current proportional to the selected load current
J3	9	S_EN	Active high compatible with 3 V and 5 V CMOS outputs pin; it enables the CurrentSense diagnostic pin
J3	10	SEL0	Active high compatible with 3 V and 5 V CMOS outputs pin; together with SEL1, it addresses the CurrentSense multiplexer
J3	11	SEL1	Active high compatible with 3 V and 5 V CMOS outputs pin; together with SEL0, it addresses the CurrentSense multiplexer
J3	12	N/A	Not connected
J3	13	IN	Voltage controlled input pin with hysteresis, compatible with 3 V and 5 V CMOS outputs. It controls OUT switch state
J3	14…18	N/A	Not connected

In case the user wishes to use the CurrentSense/MultiSense function of the device, it is necessary to plug a sense resistor in R_{SENSE}.

The package includes a through-hole resistor, to be mounted on TP1-TP2 (see Figure 4. Mounting through-hole sense resistor).

Different R_{SENSE} values can be adopted based on user preference.

Another option is soldering an SMD resistor on the dedicated PCB pad, as shown in Figure 5. Pads for soldering SMD resistor.

Figure 3. No sense resistor

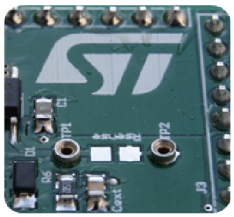

GAPG0904141657CFT

Figure 4. Mounting through-hole sense resistor

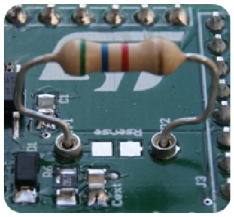

GAPG1004141007CFT

Figure 5. Pads for soldering SMD resistor

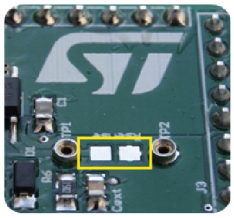

GAPG1004141008CFT

3 Thermal data

Table 2. Thermal data

Symbol	Parameter	Max	Unit
$R_{thj\text{-}amb}$	Thermal resistance junction-ambient (max)	39	°C/W

Table 3. PCB specifications

Parameter	Value
Board dimensions	25 mm x 41.5 mm
Number of Cu layer	2
Layer Cu thickness	35 µm
Board finish thickness	1.6 mm +/- 10%
Board Material	FR4
Thermal vias separation	1.1 mm
Thermal vias diameter	0.5 mm

Revision history

Table 4. Revision history

Date	Revision	Changes
09-Sep-2019	1	Initial release.

IMPORTANT NOTICE – PLEASE READ CAREFULLY

STMicroelectronics NV and its subsidiaries (“ST”) reserve the right to make changes, corrections, enhancements, modifications, and improvements to ST products and/or to this document at any time without notice. Purchasers should obtain the latest relevant information on ST products before placing orders. ST products are sold pursuant to ST’s terms and conditions of sale in place at the time of order acknowledgement.

Purchasers are solely responsible for the choice, selection, and use of ST products and ST assumes no liability for application assistance or the design of Purchasers’ products.

No license, express or implied, to any intellectual property right is granted by ST herein.

Resale of ST products with provisions different from the information set forth herein shall void any warranty granted by ST for such product.

ST and the ST logo are trademarks of ST. For additional information about ST trademarks, please refer to www.st.com/trademarks. All other product or service names are the property of their respective owners.

Information in this document supersedes and replaces information previously supplied in any prior versions of this document.

© 2019 STMicroelectronics – All rights reserved