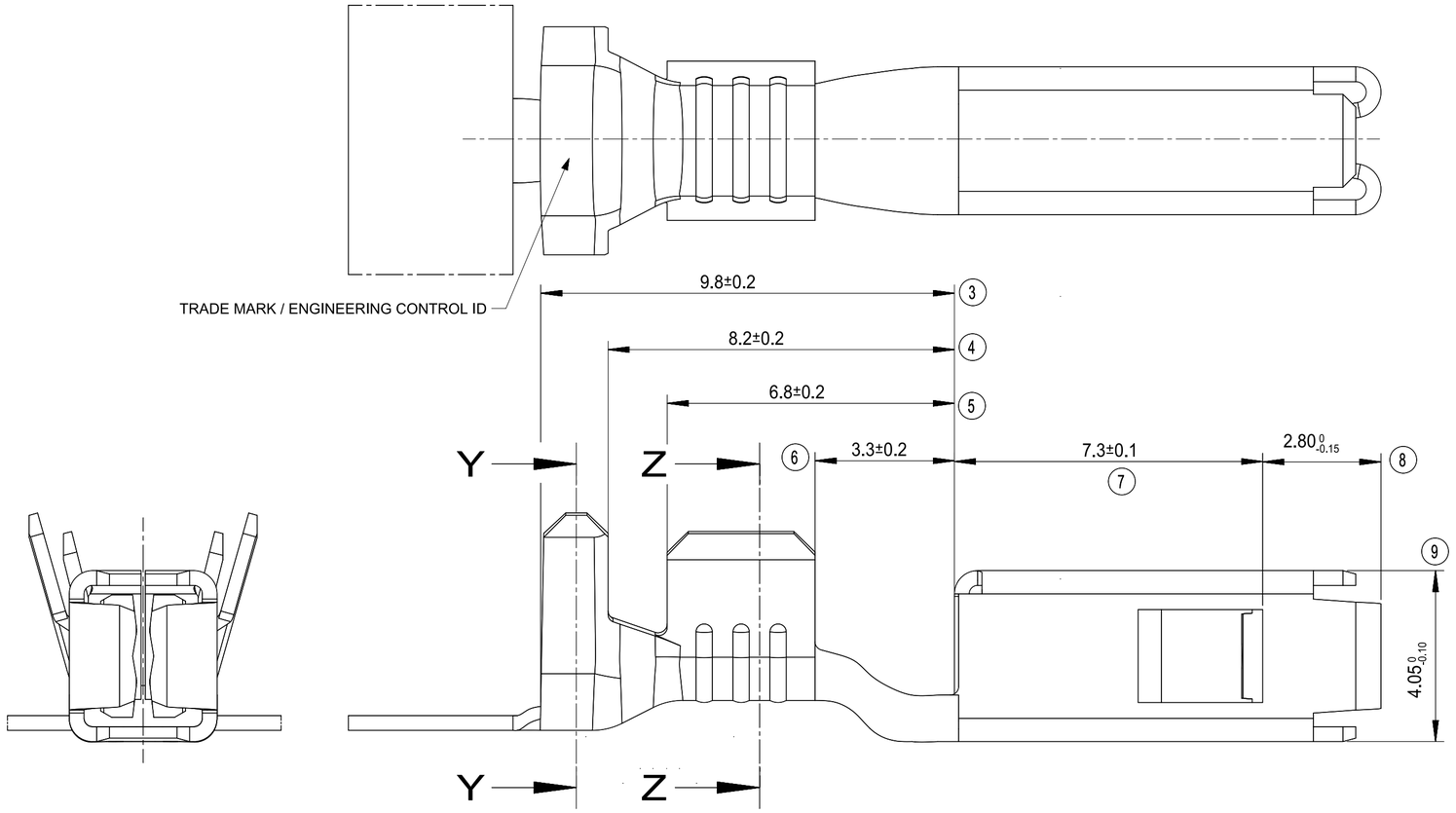

ISO VIEW

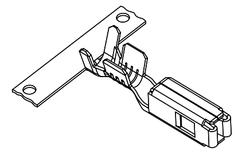

Y - Y

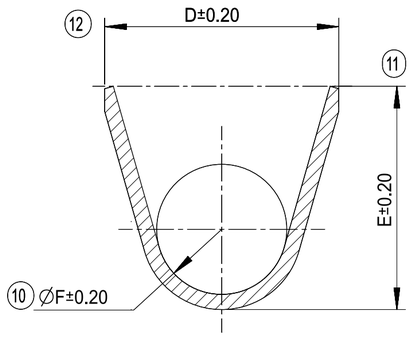

Z - Z

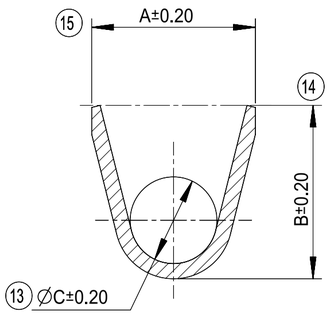

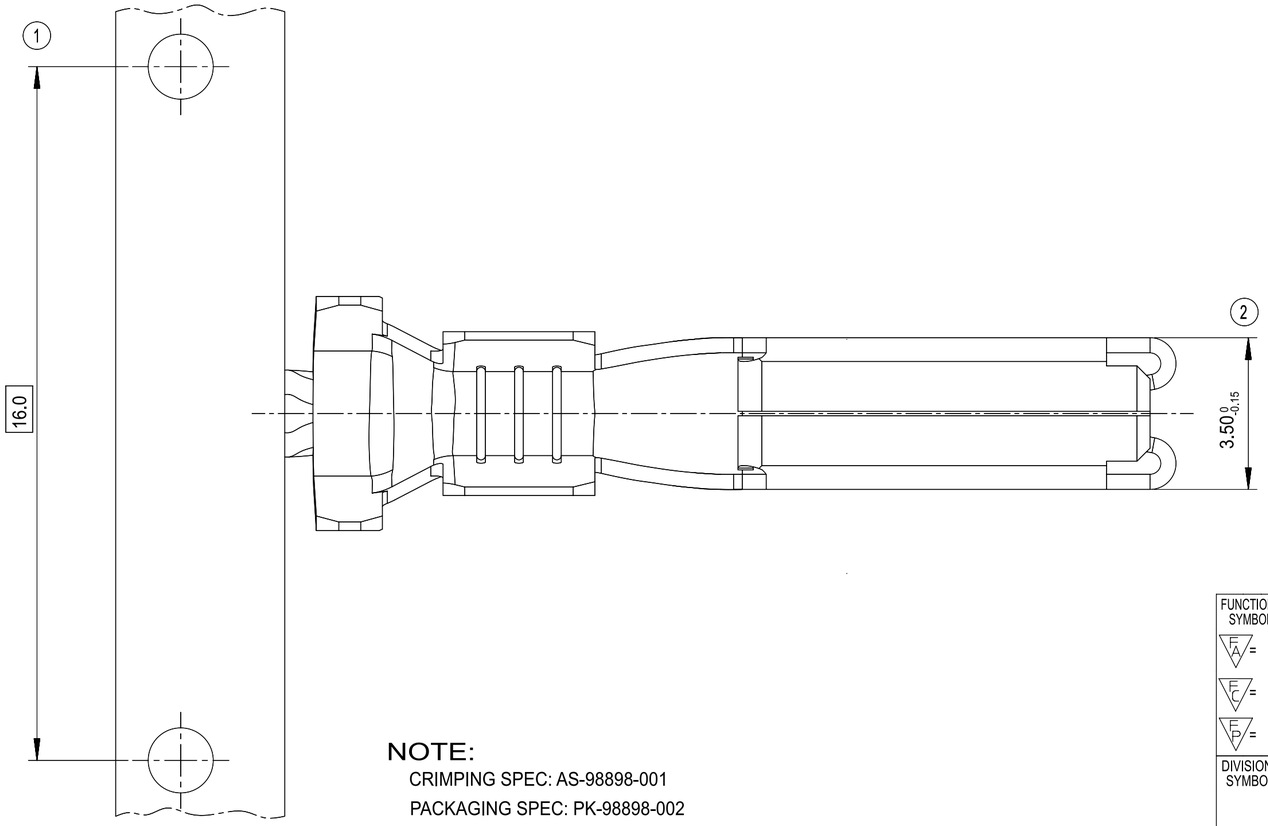

SPECIFICATIONS

GRIP CODE	S	M	L
SECTION MM2	0.35 TO 0.75	1 TO 2.5	3 TO 5
MOLEX PART NUMBER (P/N°)	0988981029	0988981039	0988981049
PLATING	Pre-plated 2µ Sn min.		
MATERIAL	HIGH COPPER		
PART WEIGHT (g)	0,737	0,794	0,814
THICKNESS	0.35		
A	2.55	3.80	4.70
B	2.60	4.00	4.95
∅C	1.20	2.00	2.00
D	3.85	5.40	6.35
E	4.00	5.15	6.60
∅F	2.30	3.00	3.30

NOTE:
CRIMPING SPEC: AS-98898-001
PACKAGING SPEC: PK-98898-002

FUNCTIONAL SYMBOLS
FA = 0
FC = 0
FP = 0
DIVISIONAL SYMBOLS

THIS DRAWING CONTAINS INFORMATION THAT IS PROPRIETARY TO MOLEX ELECTRONIC TECHNOLOGIES, LLC AND SHOULD NOT BE USED WITHOUT WRITTEN PERMISSION

DIMENSION UNITS	SCALE
mm	1:1

GENERAL TOLERANCES (UNLESS SPECIFIED)

ANGULAR TOL	± 2.0°
4 PLACES	±
3 PLACES	±
2 PLACES	± 0.100
1 PLACE	± 0.10
0 PLACES	±

DRAFT WHERE APPLICABLE MUST REMAIN WITHIN DIMENSIONS

CURRENT REV DESC: Updated Trade Mark / Engineering control ID location. Updated latest drawing template.

PHASE: Design Production
CO NO: CO-000001519
DRWN: ChandrashekarS 2022-10-03
CHK'D: ChandrashekarS 2022-10-04
APPR: Bruno Dessirier 2022-10-04

INITIAL REVISION:
DRWN: G. DESBRUERES 2009-11-17
APPR: OPLESSIS 2012-02-07

molex

UCC2 RCPT TERMINAL 2.8

PRODUCT SALES DRAWING

DOCUMENT NUMBER	DOC TYPE	DOC PART	REVISION
SD-98898-100	PSD	001	A1

FIRST ANGLE PROJECTION	DRAWING	SERIES	MATERIAL NUMBER	CUSTOMER	SHEET NUMBER
	A2-SIZE	98898	SEE CHART	GENERAL MARKET	1 OF 1

FORMAT: TC-6x-prod-A2
REVISION: A
DATE: 2021/08/11