REVISIONS					
REV.	ECN NO.	LOCATION	DESCRIPTION	DATE	DESIGN
A0	N/A		INITIAL RELEASE	/	/
A1	N/A		图面升级整理图面	2025.06.27	阿树

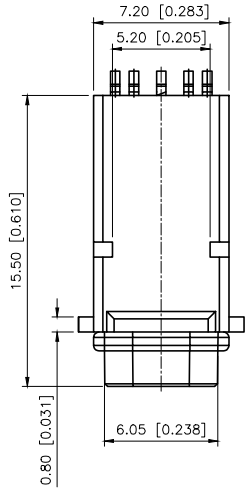

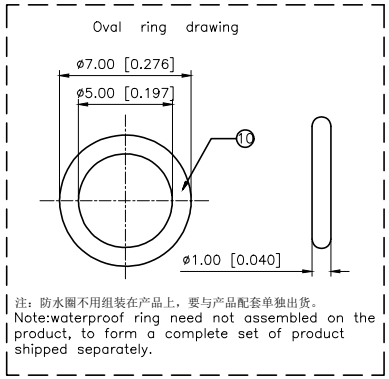

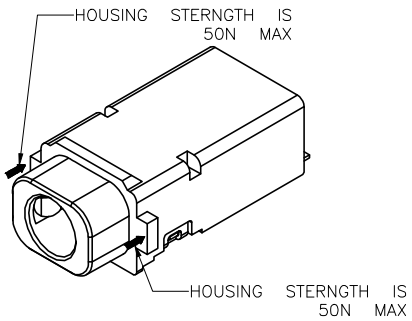

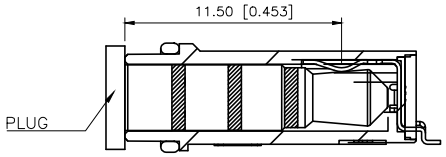

SEC:B–B

Image of plug match with contact point

SCHEMATIC	AFTER PLUG IN

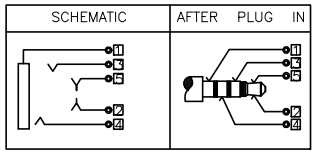

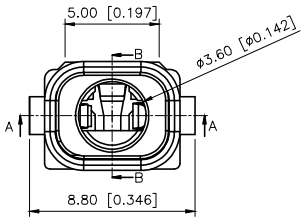

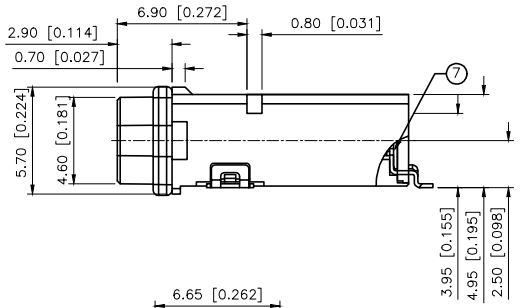

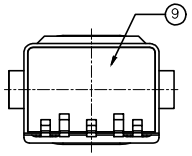

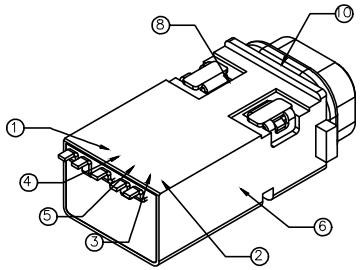

Specifiations:
1.Insulation resistance:A Voltage of 500v d.c. shall be applied to the terminals,after which measurement shall bemade, a gauge for the measurement shall be used the insulatedgauge.
2.Contact resistance:30mΩ or less.
3.Voltage proof:500V ac for one minute.
4.Durability:5,000 insertion/removal cycles(minimum).
5.Insetion force:0.6kgf~2.0kgf.
6.Withdrawal force:0.6kgf~2.0kgf.
7.Water proofness:this product is based on ipx5/7 of the jis standard.
8.Using plug:ø3.5mm、4–*pole stereo earphone(lch/rch/gnd/mic) provided that they conform to jisc 6560.
9.Housing sterng this 50n max.

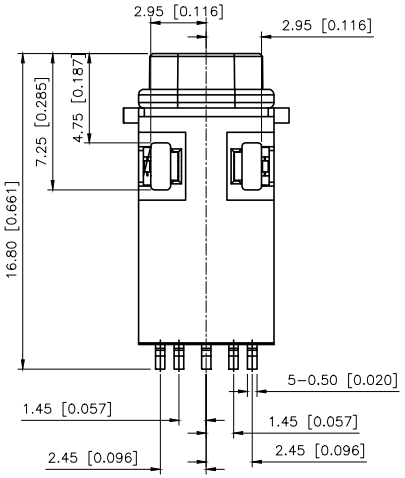

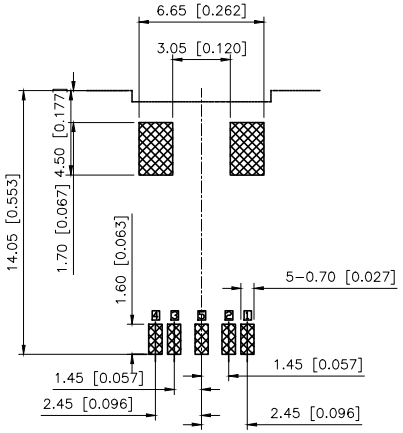

Recommended PCB Layout
Tolerance: ±0.1(Top view)

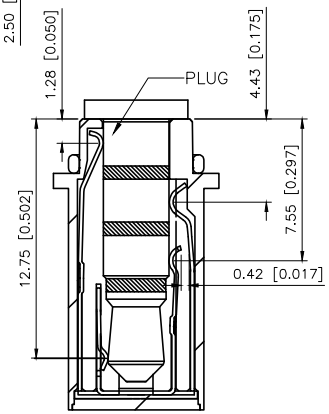

SEC :A–A

Image of plug match with contact point

No.	PART NAME	MATERIAL(THICK)	PLATING
10	Oval ring		
9	Bond		
8	Terminal		Au Plated
7	Cover	High Temp	UL 94V–0(BLack)
6	Housing	High Temp	UL 94V–0(BLack)
5	Terminal 5	Copper Alloy	
4	Terminal 4	Copper Alloy	Au Plated
3	Terminal 3	Copper Alloy	Au Plated
2	Terminal 2	Copper Alloy	Au Plated
1	Terminal 1	Copper Alloy	Au Plated

AuGLAR	±5°
X.	±0.40
X.x	±0.30
X.xx	±0.20
X.xxx	±0.15
UNSPECIFIED TOLERAuCES	

XKB Connection 星创

DESIGN	阿树	VIEW:	MODEL TYPE: 3.5 PHONE JACK
CHECKED		UNIT: mm/in	PART NO.: PJ–3255
APPROVED		SIZE: A4	DWG NO.:

XKB INDUSTRIAL PRECISION CO.,LIMITED

SCALE	PAGE	REVISION
N/A	1/1	A1