Downloaded from Arrow.com.

A-701D REV. J

| REVISIONS | | | RELEASED | |
|---|---|---|---|---|
| REV. | DESCRIPTION | | DATE | APPROVED |
| G | 31190 | REDRAWN TO CAEDS; ADDED ITEM 11 | 96/10/10 | RS |
| H | 33356 | FIND NOS 12 & 13 ADDED | 97/07/24 | RS |
| J | 40555 | "FAA/PMA" STAMP REPLACED | 99/10/07 | RS |

# FAA/PMA

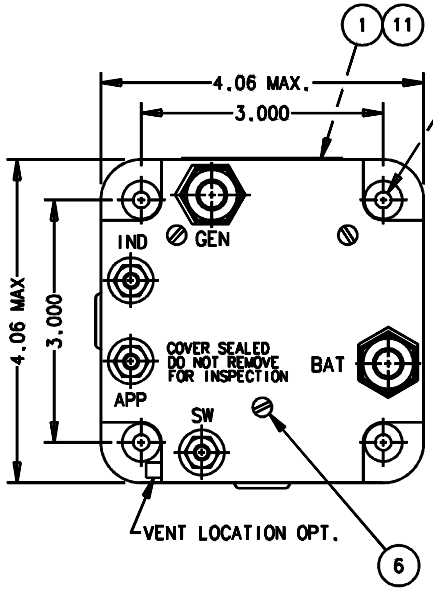


| | |
|---|---|
| CONSTRUCTION | GASKET SEALED (VENTED) |
| MAIN CONTACTS | |
| CONFIGURATION | SPST N.O. |
| VOLTAGE | 28 VDC |
| CURRENT | 400 AMP |
| | 1000 AMP FOR 30 SEC |
| | 1500 AMP INRUSH |
| DIFF. PICKUP | 0.5 +/-0.15 VDC |
| REV.I DROPOUT | 25-50 AMPS |
| COIL DATA | |
| VOLTAGE | 24 TO 30 VDC |
| PICKUP | 15 VOLTS MAX |
| PULL THROUGH | 7 VOLTS MAX AT 25°C |
| DROPOUT | 0.5 - 7 VOLTS |
| RESISTANCE AT 25°C | |
| PICKUP | 7.5 OHM +/-20% |
| HOLDING | 80 OHM +/-20% |
| PEAK INRUSH | 3 AMP MAX |
| DUTY | CONTINUOUS ECONOMIZING |
| AMBIENT TEMPERATURE | -55°C TO +71°C |
| LIFE ELECTRICAL | 50,000 CYCLES MIN |
| WEIGHT | 3 LBS. 10 OZ. |

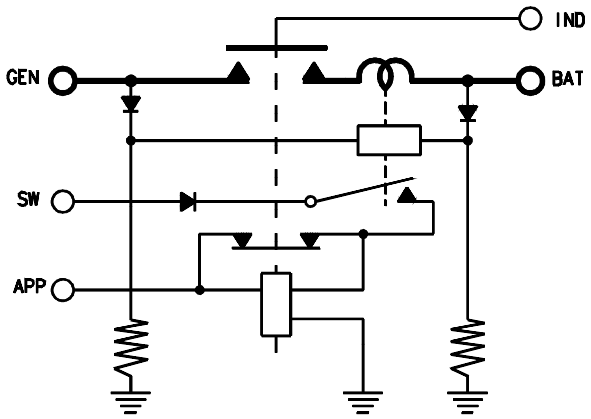


NOTES:
1. DESIGNED TO MEET THE APPLICABLE PORTIONS OF MIL-C-5026 AND MIL-R-6106.
2. INTERMITTENT COIL DUTY FROM APP, 2 MIN. MAX
3. MOUNTING SURFACE SHALL PROVIDE ELECTRICAL GROUND

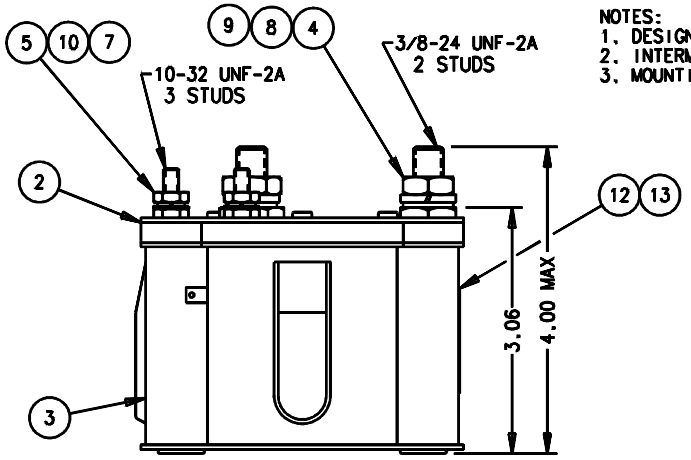


| FIND NO | QTY REQD | PART OR IDENTIFYING NO | NOMENCLATURE OR DESCRIPTION | FSCM NO | DRAWING OR SPECIFICATION | MATERIAL OR NOTE |
|---|---|---|---|---|---|---|
| 13 | 1 | 39529-024 | OVERLAY | | | |
| 12 | 1 | 58400-171 | PLATE-FAA/PMA | | | |
| 11 | 1 | 39529-001 | OVERLAY - NAME PLATE | | | |
| 10 | 3 | 51810-031 | WASHER - LOCK, NO. 10 SPLIT | | | STEEL |
| 9 | 2 | 51807-071 | WASHER - LOCK 3/8 X .688 X .094 SPLIT | | | STEEL |
| 8 | 2 | 51704-161 | WASHER - 5/8 X .390 X .964 | | | STEEL |
| 7 | 3 | 51702-851 | WASHER - 7/16 X 13/64 X .032 | | | STEEL |
| 6 | 3 | 51200-020 | SCREW - 4 X 1/4 PAN HD, SHT. MTL. | | | S. STEEL |
| 5 | 3 | 50410-086 | NUT - 10-32 X 3/8 X 1/8 HEX. | | | BRASS |
| 4 | 2 | 50407-166 | NUT - 3/8-24 X 5/8 X 7/32 HEX. | | | BRASS |
| 3 | 1 | 33491-010 | PRIMARY ASSEMBLY | | | |
| 2 | 1 | 33254-003 | PLATE - BASE COVER | | | |
| 1 | 1 | 16043-001 | PLATE - NAME | | | |

REF TYCO P/N 1-1616109-1

UNLESS OTHERWISE SPECIFIED DIMENSIONS ARE IN INCHES TOLERANCES ON

| 2 PL DEC. | 3 PL DEC. | ANGLES |
|---|---|---|
| ±.06 | ±.010 | ±1° |

MATERIAL

| | | |
|---|---|---|
| DR BY | RLS | 99/11/02 |
| CHK BY | RS | 99/11/02 |
| ENGR | JL | 99/11/03 |
| MFG | CC | 99/11/04 |

RELEASE
CONTR NO.
GOVT APPVL

HARTMAN ELECTRICAL MANUFACTURING
MANSFIELD, OHIO

CUTOUT - REVERSE CURRENT
400 AMP - 28 VDC

093

| SIZE | CODE IDENT | DWG NO. |
|---|---|---|
| C | 74063 | A-701D |

SCALE NONE SHEET