TABLE OF CONTENTS

SHEET NO.	SHEET DESCRIPTION
1	NOTES
2	1x2 BLADE SEALED ASSEMBLY KEYING CONFIGURATIONS
3	1x3 BLADE SEALED ASSEMBLY KEYING CONFIGURATIONS
4	CLIP-SLOT CONFIGURATIONS
5	BLADE SEALED ASSEMBLY
6	CONNECTION SYSTEM PACKAGING
7	WIRE DRESS COVER INTERFACE OPTIONS
8	1x2 BLADE SEALED ASSEMBLY BOM INTERFACE OPTION 1
9	1x2 BLADE SEALED ASSEMBLY BOM INTERFACE OPTION 2
10	1x3 BLADE SEALED ASSEMBLY BOM INTERFACE OPTION 1
11	1x3 BLADE SEALED ASSEMBLY BOM INTERFACE OPTION 2

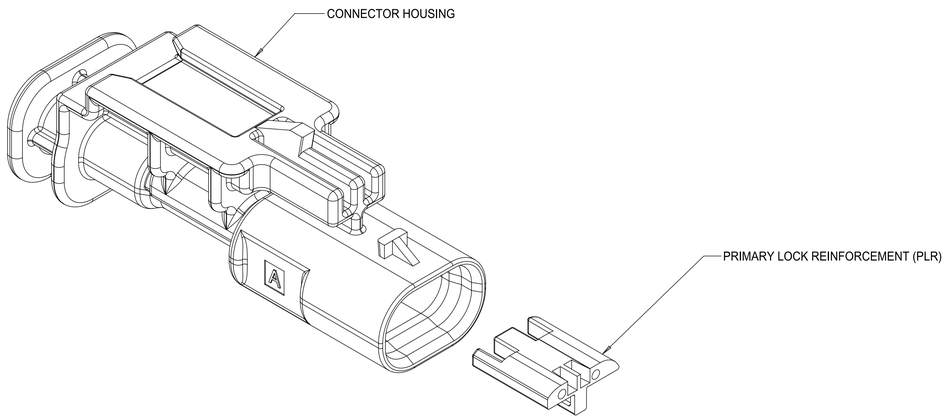

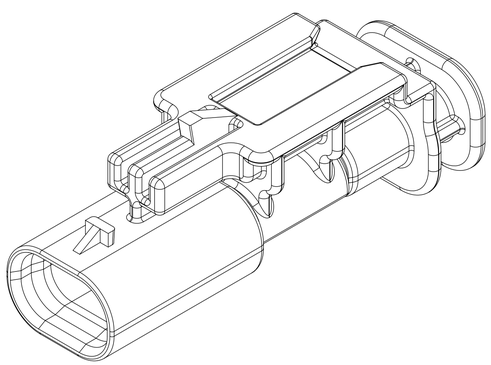

1x2 BLADE SEALED ASSEMBLY

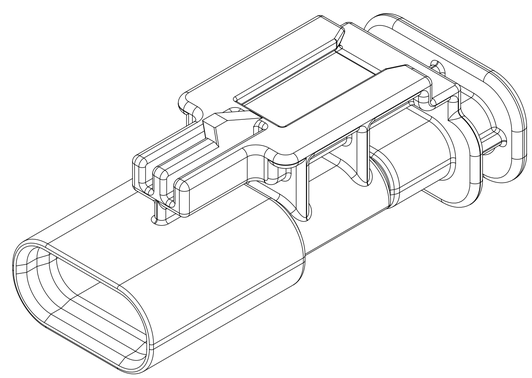

1x3 BLADE SEALED ASSEMBLY

NOTES: VALID UNLESS OTHERWISE SPECIFIED

1. GENERAL:
a. APPLICATION SPECIFICATION SEE: AS-34900-0001
CONTAINS: PRODUCT INTRODUCTION, PRODUCT SUMMARY, CONNECTOR ASSEMBLY, PACKAGING INFORMATION, CONNECTOR MATING, SERVICE INSTRUCTIONS, ELECTRICAL CONTINUITY CHECKING, CRIMPING, AND TROUBLESHOOTING.
b. PRODUCT SPECIFICATION SEE: PS-34900-0001
CONTAINS: PRODUCT INTRODUCTION, PRODUCT SUMMARY, RATINGS (CURRENT, TEMPERATURE, SEALING, AND FLAMMABILITY), AND PRODUCT VALIDATION.
c. PACKAGING SPECIFICATION PER MOLEX DRAWING: PK-31301-898
d. PARTS MUST BE IN COMPLIANCE TO MOLEX CHEMICAL SUBSTANCES FOR PRODUCTS AND PACKAGING SPECIFICATION: ES-40000-5016
e. DATA MUST BE SUBMITTED UNDER THE MOLEX PART NUMBER TO IMDS (COMPANY ID#13255)

2. DESIGN - MATERIALS:
a. SEE BOM TABLE

3. DESIGN - GEOMETRY:
a. THIS IS A 100% CAD GENERATED PART. THE CAD MATHEMATICAL DATA IS THE MASTER FOR THIS PART. FOR DIMENSIONAL OR ANY INFORMATION NOT SHOWN ON THIS DRAWING, ANALYZE THE CAD MODEL.
b. GEOMETRIC DIMENSIONS AND TOLERANCES PER ASME Y14.5M - 1994
c. EDGES AND UNDIMENSIONED DETAILS PER ISO13715
d. CORNERS SHOWN AS SHARP TO BE R 0.2 MAX.
e. LETTERING SHALL BE 0.15 MAX RAISED IN 0.25 MAX RECESS PAD. THIS INCLUDES RECYCLING CODE, CAVITY ID, VENDOR IDENTIFICATION,
f. VISUAL DEFECTS SHALL MEET COSMETIC STANDARD PS-45499-002 (Class B)
g. LASER MARKING:
1. PART NUMBER
2. DAY OF THE YEAR
3. SHIFT
4. YEAR

REV	DESCRIPTION
B2	MINOR UPDATES TO 3-CKT BOM TABLE
B1	REMOVED OBSOLETE PART NUMBERS PER PCN #513405
B	PART NUMBERS OBSOLETE
A17	NOTE ADDED ON PRESENCE OF SHARKFINS
A16	CHANGED PNs TO OBSOLETE STATUS
A15	- NX-REMASTERING FROM MODEL MANAGER - 1x2 KEY C MOVED TO SALEABLE - 1X3 WDC INTERFACE 2 PART NUMBERS UPDATED TO MATCH E-DRAWING
A14	CORRECTED CHARTED DIMENSION 3 FOR 1X3 11MM CLIPSLOT
A13	1x3 KEY A&B SALEABLE (NON 40G)
A12	1X2 KEYS A&B W/ WDC SALEABLE
A11	CORRECTED REVISION LOG
A10	1X2,1X3 WIRE DRESS FEATURES OK TO TOOL
A9	1X2,1X3 PART # STATUS UPDATED
A8	1X2 40G CLIP-SLOT OK TO TOOL
A7	1X2,1X3 PART # UPDATED TO "TOOLED BUT NOT VALIDATED"
A6	ADDED 40G CLIP-SLOT PART NUMBERS
A5	BOM CORRECTIONS AND UPDATES
A4	BOM CORRECTIONS AND UPDATES
A3	1x2, 1x3 NON-SIR PART# OK TO TOOL
A2	ADDED 1x3 11mm CLIP-SLOT PART #
A	ADDED BLACK PART# AND MINOR BOM UPDATES
6	ADDED CLIP SLOT CONFIGURATIONS
5	1X3 BOM UPDATED
4	1X3 INLINE ASSY VIEWS ADDED
3	MINOR BOM CORRECTIONS
2	UPDATED PACKAGING DIMENSIONS
1	INITIAL RELEASE

INSPECTION NUMBER LOG
LAST NUMBER USED:
ADDED:
REMOVED:

THIS DRAWING CONTAINS INFORMATION THAT IS PROPRIETARY TO MOLEX ELECTRONIC TECHNOLOGIES, LLC AND SHOULD NOT BE USED WITHOUT WRITTEN PERMISSION

DIMENSION UNITS	SCALE
MM	4:1

GENERAL TOLERANCES (UNLESS SPECIFIED)

ANGULAR TOL	± 3°
4 PLACES	±
3 PLACES	±
2 PLACES	± 0.100
1 PLACE	± 0.20
0 PLACES	± 0.50

DRAFT WHERE APPLICABLE MUST REMAIN WITHIN DIMENSIONS

CURRENT REV DESC: REMOVED OBSOLETED PART NUMBERS AS PER PCN#513405

STATUS: Production
DRWN: Abhishek Gajare 2024-09-02
CHK'D: ChandrashekarS 2024-09-04
APPR: Katy Boruszewski 2024-09-06

molex

1.2MM 1X2, 1X3 BLADE
MINOR UPDATES TO 3-CKT BOM

PRODUCT CUSTOMER DRAWING

THIRD ANGLE PROJECTION	DRAWING	SERIES	MATERIAL NUMBER	CUSTOMER	SHEET NUMBER
	D-SIZE	34899	SEE BOM	GENERAL MARKET	1 OF 11

DOCUMENT NUMBER	DOC TYPE	DOC PART	REVISION
SD-34899-2001	PSD	001	B2

1x2 BLADE SEALED ASSEMBLY KEYING CONFIGURATIONS. FOR PART NUMBERS REFER TO BOM SHEET.

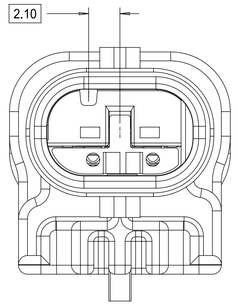

KEYING OPTION A

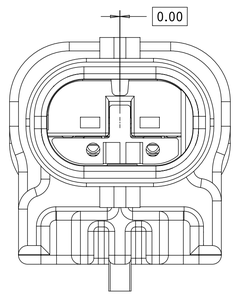

KEYING OPTION B

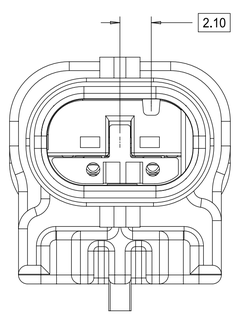

KEYING OPTION C

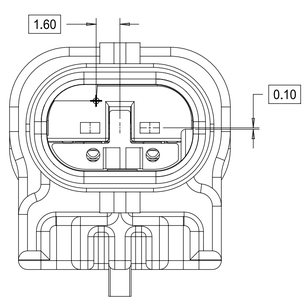

KEYING OPTION E

THIS DRAWING CONTAINS INFORMATION THAT IS PROPRIETARY TO MOLEX ELECTRONIC TECHNOLOGIES, LLC AND SHOULD NOT BE USED WITHOUT WRITTEN PERMISSION

DIMENSION UNITS	SCALE
MM	5:1

GENERAL TOLERANCES (UNLESS SPECIFIED)

ANGULAR TOL	± 3°
4 PLACES	±
3 PLACES	±
2 PLACES	± 0.100
1 PLACE	± 0.20
0 PLACES	± 0.50

DRAFT WHERE APPLICABLE MUST REMAIN WITHIN DIMENSIONS

CURRENT REV DESC: REMOVED OBSOLETED PART NUMBERS AS PER PCN#513405

STATUS: Production

DRWN:	Abhishek Gajare	2024-09-02
CHK'D:	ChandrashekarS	2024-09-04
APPR:	Katy Boruszewski	2024-09-06

THIRD ANGLE PROJECTION

DRAWING	SERIES
D-SIZE	34899

molex

1.2MM 1X2, 1X3 BLADE
MINOR UPDATES TO 3-CKT BOM

PRODUCT CUSTOMER DRAWING

DOCUMENT NUMBER	DOC TYPE	DOC PART	REVISION
SD-34899-2001	PSD	001	B2

MATERIAL NUMBER	CUSTOMER	SHEET NUMBER
SEE BOM	GENERAL MARKET	2 OF 11

FORMAT TYLAprint2
REVISION: B
DATE: 2020/06/01

1x3 BLADE SEALED ASSEMBLY KEYING CONFIGURATIONS. FOR PART NUMBERS REFER TO BOM SHEET.

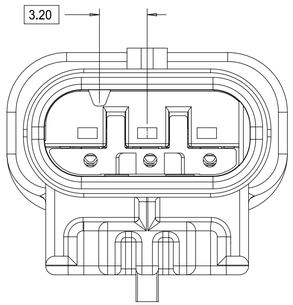

KEYING OPTION A

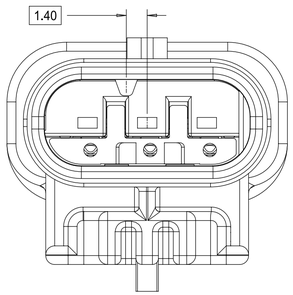

KEYING OPTION B

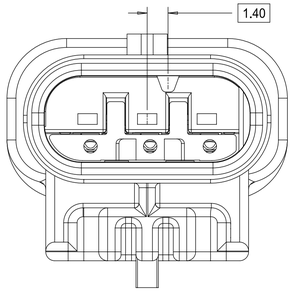

KEYING OPTION C

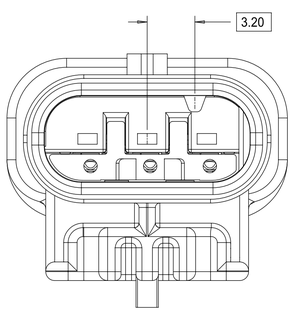

KEYING OPTION D

THIS DRAWING CONTAINS INFORMATION THAT IS PROPRIETARY TO MOLEX ELECTRONIC TECHNOLOGIES, LLC AND SHOULD NOT BE USED WITHOUT WRITTEN PERMISSION

DIMENSION UNITS	SCALE
MM	5:1

GENERAL TOLERANCES (UNLESS SPECIFIED)

ANGULAR TOL	± 3°
4 PLACES	±
3 PLACES	±
2 PLACES	± 0.100
1 PLACE	± 0.20
0 PLACES	± 0.50

DRAFT WHERE APPLICABLE MUST REMAIN WITHIN DIMENSIONS

CURRENT REV DESC: REMOVED OBSOLETED PART NUMBERS AS PER PCN#513405

STATUS:	Production	
DRWN:	Abhishek Gajare	2024-09-02
CHK'D:	ChandrashekarS	2024-09-04
APPR:	Katy Boruszewski	2024-09-06

THIRD ANGLE PROJECTION

DRAWING	SERIES
D-SIZE	34899

molex

1.2MM 1X2, 1X3 BLADE
MINOR UPDATES TO 3-CKT BOM

PRODUCT CUSTOMER DRAWING

DOCUMENT NUMBER	DOC TYPE	DOC PART	REVISION
SD-34899-2001	PSD	001	B2

MATERIAL NUMBER	CUSTOMER	SHEET NUMBER
SEE BOM	GENERAL MARKET	3 OF 11

CONVERT TO Brand=NO
KEYWORD= N
DATE 2025/06/01

CLIP-SLOT CONFIGURATIONS. FOR PART NUMBERS REFER TO BOM SHEET.

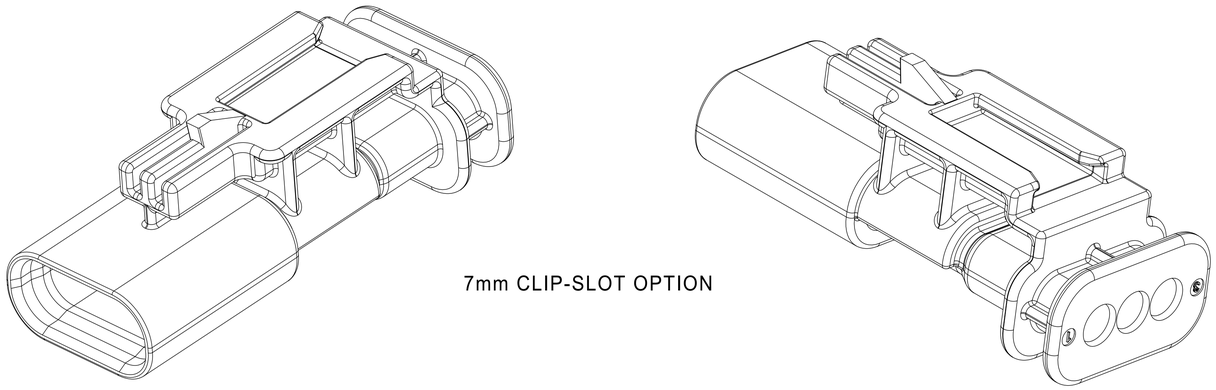

7mm CLIP-SLOT OPTION

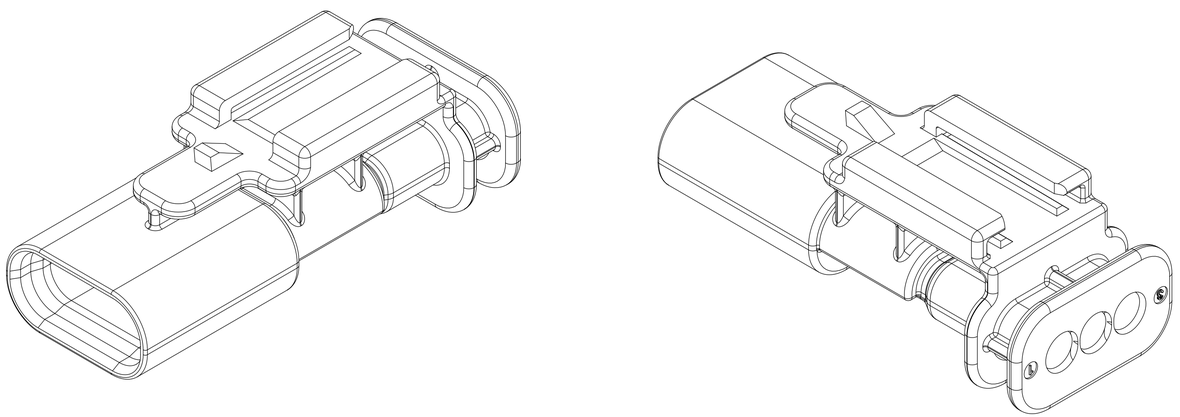

11mm CLIP-SLOT OPTION

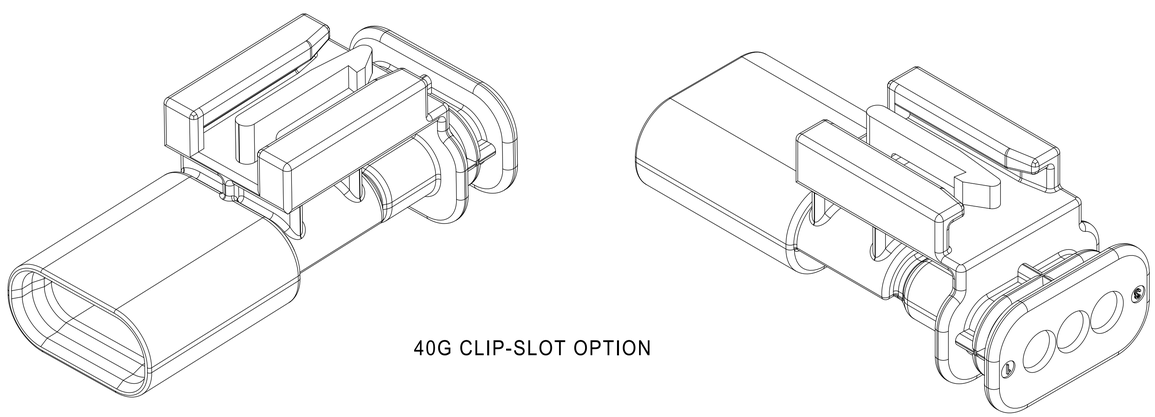

40G CLIP-SLOT OPTION

THIS DRAWING CONTAINS INFORMATION THAT IS PROPRIETARY TO MOLEX ELECTRONIC TECHNOLOGIES, LLC AND SHOULD NOT BE USED WITHOUT WRITTEN PERMISSION

DIMENSION UNITS	SCALE
MM	4:1

GENERAL TOLERANCES (UNLESS SPECIFIED)

ANGULAR TOL	± 3°
4 PLACES	±
3 PLACES	±
2 PLACES	± 0.100
1 PLACE	± 0.20
0 PLACES	± 0.50

DRAFT WHERE APPLICABLE MUST REMAIN WITHIN DIMENSIONS

CURRENT REV DESC: REMOVED OBSOLETED PART NUMBERS AS PER PCN#513405

STATUS: Production

DRWN:	Abhishek Gajare	2024-09-02
CHK'D:	ChandrashekarS	2024-09-04
APPR:	Katy Boruszewski	2024-09-06

THIRD ANGLE PROJECTION | DRAWING: D-SIZE | SERIES: 34899

molex

1.2MM 1X2, 1X3 BLADE
MINOR UPDATES TO 3-CKT BOM

PRODUCT CUSTOMER DRAWING

DOCUMENT NUMBER	DOC TYPE	DOC PART	REVISION
SD-34899-2001	PSD	001	B2

MATERIAL NUMBER	CUSTOMER	SHEET NUMBER
SEE BOM	GENERAL MARKET	4 OF 11

FORMAT TCAD#001
REVISION: B
DATE: 2020-06-01

BLADE SEALED ASSEMBLY

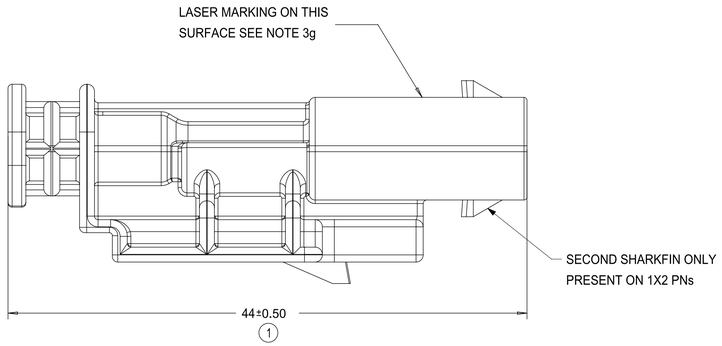

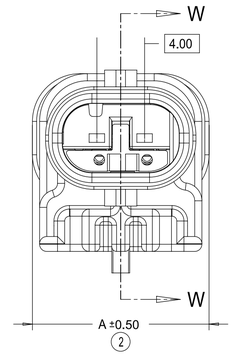

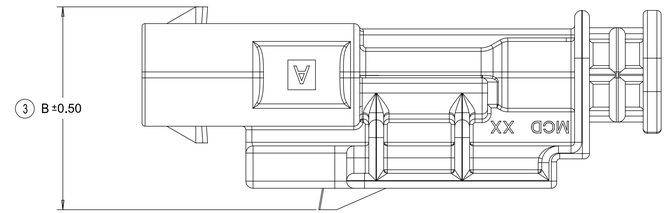

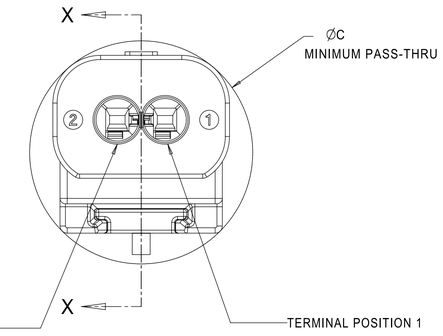

REAR VIEW
(WIRE HARNESS SIDE)

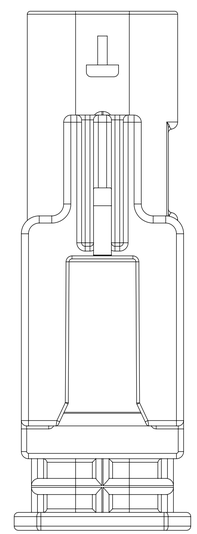

1x3 BLADE SEALED ASSEMBLY, 40G CLIP SLOT	19	16.75	21.75
1x3 BLADE SEALED ASSEMBLY, 11mm CLIP SLOT	19	14.6	20.75
1x3 BLADE SEALED ASSEMBLY, 7mm CLIP SLOT	19	17	20.5
1x2 BLADE SEALED ASSEMBLY, 40G CLIP SLOT	15	16.75	20.25
1x2 BLADE SEALED ASSEMBLY, 11mm CLIP SLOT	15	15.5	19
1x2 BLADE SEALED ASSEMBLY, 7mm CLIP SLOT	15	17	18.75
CONFIGURATION	A	B	C

CHARTED DIMENSIONS

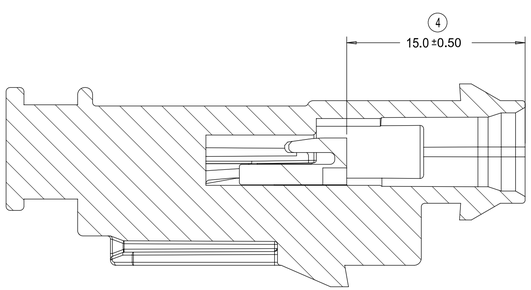

PRIMARY LOCK REINFORCEMENT (PLR) SHOWN
IN THE PRE-STAGED POSITION

SECTION W-W

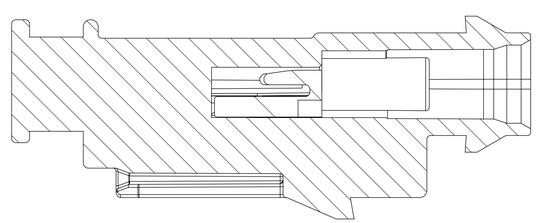

PRIMARY LOCK REINFORCEMENT (PLR) SHOWN
IN THE FINAL-LOCK POSITION

SECTION X-X

THIS DRAWING CONTAINS INFORMATION THAT IS PROPRIETARY TO MOLEX ELECTRONIC TECHNOLOGIES, LLC AND SHOULD NOT BE USED WITHOUT WRITTEN PERMISSION

DIMENSION UNITS	SCALE
MM	4:1

GENERAL TOLERANCES (UNLESS SPECIFIED)

ANGULAR TOL	± 3°
4 PLACES	±
3 PLACES	±
2 PLACES	± 0.100
1 PLACE	± 0.20
0 PLACES	± 0.50

DRAFT WHERE APPLICABLE MUST REMAIN WITHIN DIMENSIONS

CURRENT REV DESC: REMOVED OBSOLETED PART NUMBERS AS PER PCN#513405

STATUS:	Production	
DRWN:	Abhishek Gajare	2024-09-02
CHK'D:	ChandrashekarS	2024-09-04
APPR:	Katy Boruszewski	2024-09-06

THIRD ANGLE PROJECTION | DRAWING: D-SIZE | SERIES: 34899

molex

1.2MM 1X2, 1X3 BLADE
MINOR UPDATES TO 3-CKT BOM

PRODUCT CUSTOMER DRAWING

DOCUMENT NUMBER	DOC TYPE	DOC PART	REVISION
SD-34899-2001	PSD	001	B2

MATERIAL NUMBER	CUSTOMER	SHEET NUMBER
SEE BOM	GENERAL MARKET	5 OF 11

CONNECTION SYSTEM PACKAGING

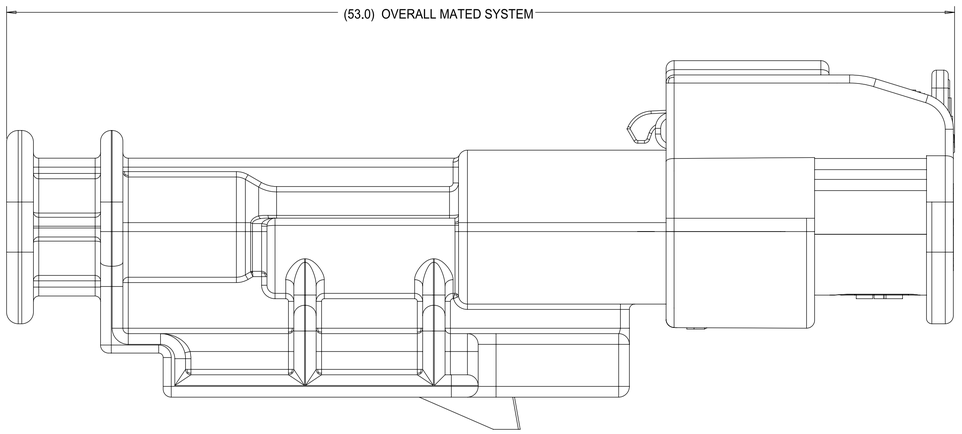

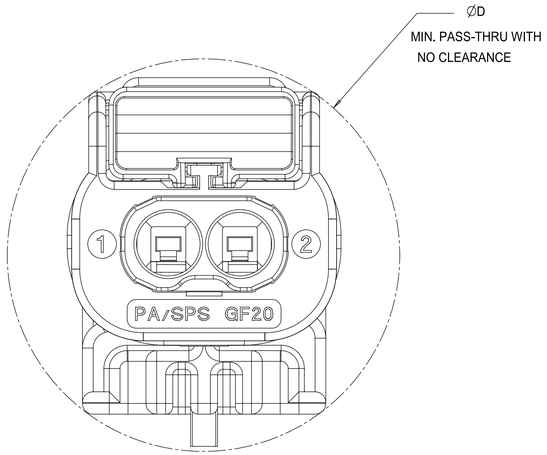

1x3 RECEPTACLE MATED TO 1x3 BLADE, 40 CLIP SLOT	TBD
1x3 RECEPTACLE MATED TO 1x3 BLADE, 11mm CLIP SLOT	24.0
1x3 RECEPTACLE MATED TO 1x3 BLADE, 7mm CLIP SLOT	23.0
1x2 RECEPTACLE MATED TO 1x2 BLADE, 40G CLIP SLOT	23.0
1x2 RECEPTACLE MATED TO 1x2 BLADE, 11mm CLIP SLOT	23.0
1x2 RECEPTACLE MATED TO 1x2 BLADE, 7mm CLIP SLOT	23.0
1.2mm CONNECTION SYSTEM CONFIGURATION	D

CHARTED DIMENSIONS

THIS DRAWING CONTAINS INFORMATION THAT IS PROPRIETARY TO MOLEX ELECTRONIC TECHNOLOGIES, LLC AND SHOULD NOT BE USED WITHOUT WRITTEN PERMISSION

DIMENSION UNITS	SCALE
MM	6:1

GENERAL TOLERANCES (UNLESS SPECIFIED)

ANGULAR TOL	± 3'
4 PLACES	±
3 PLACES	±
2 PLACES	± 0.100
1 PLACE	± 0.20
0 PLACES	± 0.50

DRAFT WHERE APPLICABLE MUST REMAIN WITHIN DIMENSIONS

CURRENT REV DESC: REMOVED OBSOLETED PART NUMBERS AS PER PCN#513405

STATUS:	Production	
DRWN:	Abhishek Gajare	2024-09-02
CHK'D:	ChandrashekarS	2024-09-04
APPR:	Katy Boruszewski	2024-09-06

THIRD ANGLE PROJECTION | DRAWING: D-SIZE | SERIES: 34899

molex

1.2MM 1X2, 1X3 BLADE
MINOR UPDATES TO 3-CKT BOM

PRODUCT CUSTOMER DRAWING

DOCUMENT NUMBER	DOC TYPE	DOC PART	REVISION
SD-34899-2001	PSD	001	B2

MATERIAL NUMBER	CUSTOMER	SHEET NUMBER
SEE BOM	GENERAL MARKET	6 OF 11

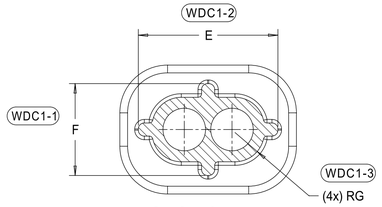

SECTION Z-Z

3 CIRCUIT	18.8	10.8	5.4	15.7	7.7	2.45
2 CIRCUIT	14.8	10.8	5.4	11.7	7.7	2.45
CONFIGURATION	A	B	C	E	F	G
CHARTED DIMENSIONS						

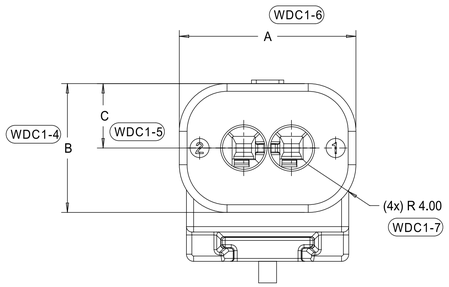

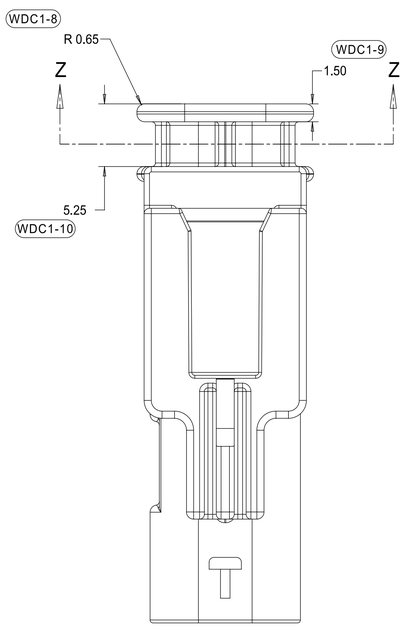

WIRE DRESS COVER
INTERFACE OPTION 1
WIRE DRESS COVERS
NOT AVAILABLE

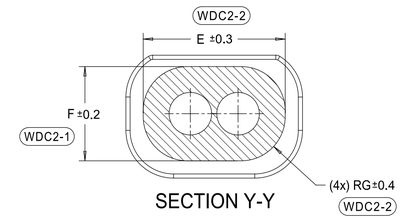

SECTION Y-Y

3 CIRCUIT	18.8	10.8	5.4	15.9	7.9	3.7
2 CIRCUIT	14.8	10.3	5.4	11.9	7.9	3.7
CONFIGURATION	A	B	C	E	F	G
CHARTED DIMENSIONS						

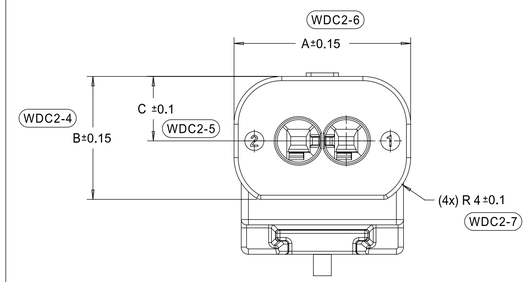

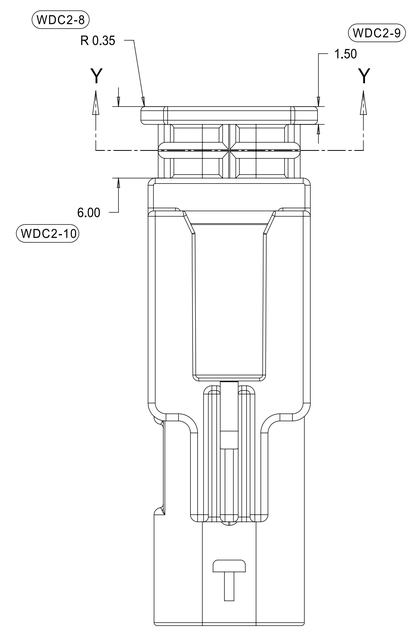

WIRE DRESS COVER
INTERFACE OPTION 2
BASED ON HIRSCHMANN INTERFACE
DRAWING 808-012-xxx REV B5

THIS DRAWING CONTAINS INFORMATION THAT IS PROPRIETARY TO MOLEX ELECTRONIC TECHNOLOGIES, LLC AND SHOULD NOT BE USED WITHOUT WRITTEN PERMISSION

DIMENSION UNITS	SCALE
MM	4:1

GENERAL TOLERANCES (UNLESS SPECIFIED)

ANGULAR TOL	± 3'
4 PLACES	±
3 PLACES	±
2 PLACES	± 0.100
1 PLACE	± 0.20
0 PLACES	± 0.50

DRAFT WHERE APPLICABLE MUST REMAIN WITHIN DIMENSIONS

CURRENT REV DESC: REMOVED OBSOLETED PART NUMBERS AS PER PCN#513405

STATUS:	Production	
DRWN:	Abhishek Gajare	2024-09-02
CHK'D:	ChandrashekarS	2024-09-04
APPR:	Katy Boruszewski	2024-09-06

THIRD ANGLE PROJECTION | DRAWING: D-SIZE | SERIES: 34899

molex

1.2MM 1X2, 1X3 BLADE
MINOR UPDATES TO 3-CKT BOM

PRODUCT CUSTOMER DRAWING

DOCUMENT NUMBER	DOC TYPE	DOC PART	REVISION
SD-34899-2001	PSD	001	B2

MATERIAL NUMBER	CUSTOMER	SHEET NUMBER
SEE BOM	GENERAL MARKET	7 OF 11

1x2 BLADE SEALED ASSEMBLY BOM
FOR WIRE DRESS COVER INTERFACE 1
REFER WIRE DRESS COVER INTERFACE SHEET
FOR DETAILS

ASSEMBLY DESCRIPTION	ASSEMBLY PART NUMBER	WIRE DRESS COVER INTERFACE OPTION	A	B	C	E												PRODUCTION TOOL STATUS	COMMENTS
KEYING OPTION E, 11mm CLIP SLOT, STONE GRAY	34899-2043	1															E	CONCEPT	
KEYING OPTION C, 11mm CLIP SLOT, DARK GRAY	34899-2042	1														C		CONCEPT	
KEYING OPTION B, 11mm CLIP SLOT, LIGHT GRAY	34899-2041	1													B			CONCEPT	
KEYING OPTION A, 11mm CLIP SLOT, BLACK	34899-2040	1												A				CONCEPT	
KEYING OPTION E, 11mm CLIP SLOT, YELLOW	34899-2033	1											E					CONCEPT	
KEYING OPTION C, 11mm CLIP SLOT, YELLOW	34899-2032	1										C						CONCEPT	
KEYING OPTION B, 11mm CLIP SLOT, YELLOW	34899-2031	1									B							CONCEPT	
KEYING OPTION A, 11mm CLIP SLOT, YELLOW	34899-2030	1								A								CONCEPT	
KEYING OPTION E, 7mm CLIP SLOT, STONE GRAY	34899-2023	1							E									OBSOLETE	
KEYING OPTION C, 7mm CLIP SLOT, DARK GRAY	34899-2022	1						C										OBSOLETE	
KEYING OPTION B, 7mm CLIP SLOT, LIGHT GRAY	34899-2021	1					B											OBSOLETE	
KEYING OPTION A, 7mm CLIP SLOT, BLACK	34899-2020	1				A												OBSOLETE	
KEYING OPTION E, 7mm CLIP SLOT, YELLOW	34899-2013	1			E													TOOLED BUT NOT VALIDATED	
KEYING OPTION C, 7mm CLIP SLOT, YELLOW	34899-2012	1		C														SALEABLE	
KEYING OPTION B, 7mm CLIP SLOT, YELLOW	34899-2011	1	B															OBSOLETE	
KEYING OPTION A, 7mm CLIP SLOT, YELLOW	34899-2010	1	A															SALEABLE	

DESCRIPTION	COLOR	MATERIAL
PLR	NATURAL	SPS/NYLON GF20
1x2 CONNECTOR HOUSING, KEYING OPTION E 11mm CLIP SLOT	STONE GRAY	SPS/NYLON GF20
1x2 CONNECTOR HOUSING, KEYING OPTION C 11mm CLIP SLOT	DARK GRAY	SPS/NYLON GF20
1x2 CONNECTOR HOUSING, KEYING OPTION B 11mm CLIP SLOT	LIGHT GRAY	SPS/NYLON GF20
1x2 CONNECTOR HOUSING, KEYING OPTION A 11mm CLIP SLOT	BLACK	SPS/NYLON GF20
1x2 CONNECTOR HOUSING, KEYING OPTION E 11mm CLIP SLOT	YELLOW	SPS/NYLON GF20
1x2 CONNECTOR HOUSING, KEYING OPTION C 11mm CLIP SLOT	YELLOW	SPS/NYLON GF20
1x2 CONNECTOR HOUSING, KEYING OPTION B 11mm CLIP SLOT	YELLOW	SPS/NYLON GF20
1x2 CONNECTOR HOUSING, KEYING OPTION A 11mm CLIP SLOT	YELLOW	SPS/NYLON GF20
1x2 CONNECTOR HOUSING, KEYING OPTION E 7mm CLIP SLOT	STONE GRAY	SPS/NYLON GF20
1x2 CONNECTOR HOUSING, KEYING OPTION C 7mm CLIP SLOT	DARK GRAY	SPS/NYLON GF20
1x2 CONNECTOR HOUSING, KEYING OPTION B 7mm CLIP SLOT	LIGHT GRAY	SPS/NYLON GF20
1x2 CONNECTOR HOUSING, KEYING OPTION A 7mm CLIP SLOT	BLACK	SPS/NYLON GF20
1x2 CONNECTOR HOUSING, KEYING OPTION E 7mm CLIP SLOT	YELLOW	SPS/NYLON GF20
1x2 CONNECTOR HOUSING, KEYING OPTION C 7mm CLIP SLOT	YELLOW	SPS/NYLON GF20
1x2 CONNECTOR HOUSING, KEYING OPTION B 7mm CLIP SLOT	YELLOW	SPS/NYLON GF20
1x2 CONNECTOR HOUSING, KEYING OPTION A 7mm CLIP SLOT	YELLOW	SPS/NYLON GF20

BOM/APPLICABLE COMPONENTS TABLE

LEGEND TABLE

ABREVIATION	COMPONENT
A	CONNECTOR HOUSING KEYING OPTION A
B	CONNECTOR HOUSING KEYING OPTION B
C	CONNECTOR HOUSING KEYING OPTION C
E	CONNECTOR HOUSING KEYING OPTION E

THIS DRAWING CONTAINS INFORMATION THAT IS PROPRIETARY TO MOLEX ELECTRONIC TECHNOLOGIES, LLC AND SHOULD NOT BE USED WITHOUT WRITTEN PERMISSION

DIMENSION UNITS	SCALE
MM	2:1

GENERAL TOLERANCES (UNLESS SPECIFIED)

ANGULAR TOL	± 3'
4 PLACES	±
3 PLACES	±
2 PLACES	± 0.100
1 PLACE	± 0.20
0 PLACES	± 0.50

DRAFT WHERE APPLICABLE MUST REMAIN WITHIN DIMENSIONS

CURRENT REV DESC: REMOVED OBSOLETED PART NUMBERS AS PER PCN#513405

STATUS: Production
DRWN: Abhishek Gajare 2024-09-02
CHK'D: ChandrashekarS 2024-09-04
APPR: Katy Boruszewski 2024-09-06

THIRD ANGLE PROJECTION | DRAWING: D-SIZE | SERIES: 34899

molex

1.2MM 1X2, 1X3 BLADE
MINOR UPDATES TO 3-CKT BOM

PRODUCT CUSTOMER DRAWING

DOCUMENT NUMBER	DOC TYPE	DOC PART	REVISION
SD-34899-2001	PSD	001	B2

MATERIAL NUMBER	CUSTOMER	SHEET NUMBER
SEE BOM	GENERAL MARKET	8 OF 11

1x2 BLADE SEALED ASSEMBLY BOM
FOR WIRE DRESS COVER INTERFACE 2
REFER WIRE DRESS COVER INTERFACE SHEET
FOR DETAILS

ASSEMBLY DESCRIPTION	ASSEMBLY PART NUMBER	WIRE DRESS COVER INTERFACE OPTION											PRODUCTION TOOL STATUS	COMMENTS
KEYING OPTION A, 40G CLIP SLOT, BLACK	34899-2060	2										A	OK TO TOOL	
KEYING OPTION A, 40G CLIP SLOT, YELLOW	34899-2050	2									A		OK TO TOOL	
KEYING OPTION E, 7mm CLIP SLOT, STONE GRAY	34899-2083	2								E			OK TO TOOL	
KEYING OPTION C, 7mm CLIP SLOT, DARK GRAY	34899-2082	2							C				SALEABLE	
KEYING OPTION B, 7mm CLIP SLOT, LIGHT GRAY	34899-2081	2						B					SALEABLE	
KEYING OPTION A, 7mm CLIP SLOT, BLACK	34899-2080	2					A						SALEABLE	
KEYING OPTION E, 7mm CLIP SLOT, YELLOW	34899-2073	2				E							OK TO TOOL	
KEYING OPTION C, 7mm CLIP SLOT, YELLOW	34899-2072	2			C								SALEABLE	
KEYING OPTION B, 7mm CLIP SLOT, YELLOW	34899-2071	2		B									SALEABLE	
KEYING OPTION A, 7mm CLIP SLOT, YELLOW	34899-2070	2	A										SALEABLE	

DESCRIPTION	COLOR	MATERIAL
PLR	NATURAL	SPS/NYLON GF20
1x2 CONNECTOR HOUSING, KEYING OPTION A 40G CLIP SLOT	BLACK	SPS/NYLON GF20
1x2 CONNECTOR HOUSING, KEYING OPTION A 40G CLIP SLOT	YELLOW	SPS/NYLON GF20
1x2 CONNECTOR HOUSING, KEYING OPTION E 7mm CLIP SLOT	STONE GRAY	SPS/NYLON GF20
1x2 CONNECTOR HOUSING, KEYING OPTION C 7mm CLIP SLOT	DARK GRAY	SPS/NYLON GF20
1x2 CONNECTOR HOUSING, KEYING OPTION B 7mm CLIP SLOT	LIGHT GRAY	SPS/NYLON GF20
1x2 CONNECTOR HOUSING, KEYING OPTION A 7mm CLIP SLOT	BLACK	SPS/NYLON GF20
1x2 CONNECTOR HOUSING, KEYING OPTION E 7mm CLIP SLOT	YELLOW	SPS/NYLON GF20
1x2 CONNECTOR HOUSING, KEYING OPTION C 7mm CLIP SLOT	YELLOW	SPS/NYLON GF20
1x2 CONNECTOR HOUSING, KEYING OPTION B 7mm CLIP SLOT	YELLOW	SPS/NYLON GF20
1x2 CONNECTOR HOUSING, KEYING OPTION A 7mm CLIP SLOT	YELLOW	SPS/NYLON GF20

BOM/APPLICABLE COMPONENTS TABLE

LEGEND TABLE	
ABREVIATION	COMPONENT
A	CONNECTOR HOUSING KEYING OPTION A
B	CONNECTOR HOUSING KEYING OPTION B
C	CONNECTOR HOUSING KEYING OPTION C
E	CONNECTOR HOUSING KEYING OPTION E

THIS DRAWING CONTAINS INFORMATION THAT IS PROPRIETARY TO MOLEX ELECTRONIC TECHNOLOGIES, LLC AND SHOULD NOT BE USED WITHOUT WRITTEN PERMISSION

DIMENSION UNITS	SCALE
MM	1:1

GENERAL TOLERANCES (UNLESS SPECIFIED)

ANGULAR TOL	± 3°
4 PLACES	±
3 PLACES	±
2 PLACES	± 0.100
1 PLACE	± 0.20
0 PLACES	± 0.50

DRAFT WHERE APPLICABLE MUST REMAIN WITHIN DIMENSIONS

CURRENT REV DESC: REMOVED OBSOLETED PART NUMBERS AS PER PCN#513405

STATUS: Production
DRWN: Abhishek Gajare 2024-09-02
CHK'D: ChandrashekarS 2024-09-04
APPR: Katy Boruszewski 2024-09-06

molex

1.2MM 1X2, 1X3 BLADE
MINOR UPDATES TO 3-CKT BOM

PRODUCT CUSTOMER DRAWING

THIRD ANGLE PROJECTION	DRAWING	SERIES	MATERIAL NUMBER	CUSTOMER	SHEET NUMBER
	D-SIZE	34899	SEE BOM	GENERAL MARKET	9 OF 11

DOCUMENT NUMBER	DOC TYPE	DOC PART	REVISION
SD-34899-2001	PSD	001	B2

1x3 BLADE SEALED ASSEMBLY BOM FOR WIRE DRESS COVER INTERFACE 1 REFER WIRE DRESS COVER INTERFACE SHEET FOR DETAILS

ASSEMBLY DESCRIPTION	ASSEMBLY PART NUMBER	WIRE DRESS COVER INTERFACE OPTION																	PRODUCTION TOOL STATUS	COMMENTS
KEYING OPTION D, 11mm CLIP SLOT, STONE GRAY	34899-3043	1																D	OBSOLETE	
KEYING OPTION C, 11mm CLIP SLOT, DARK GRAY	34899-3042	1															C		OBSOLETE	
KEYING OPTION B, 11mm CLIP SLOT, LIGHT GRAY	34899-3041	1														B			OBSOLETE	
KEYING OPTION A, 11mm CLIP SLOT, BLACK	34899-3040	1													A				OBSOLETE	
KEYING OPTION D, 11mm CLIP SLOT, YELLOW	34899-3033	1												D					TOOLED BUT NOT VALIDATED	
KEYING OPTION C, 11mm CLIP SLOT, YELLOW	34899-3032	1											C						TOOLED BUT NOT VALIDATED	
KEYING OPTION B, 11mm CLIP SLOT, YELLOW	34899-3031	1										B							OBSOLETE	
KEYING OPTION A, 11mm CLIP SLOT, YELLOW	34899-3030	1									A								OBSOLETE	
KEYING OPTION D, 7mm CLIP SLOT, STONE GRAY	34899-3023	1								D									OBSOLETE	
KEYING OPTION C, 7mm CLIP SLOT, DARK GRAY	34899-3022	1							C										OBSOLETE	
KEYING OPTION B, 7mm CLIP SLOT, LIGHT GRAY	34899-3021	1						B											OBSOLETE	
KEYING OPTION A, 7mm CLIP SLOT, BLACK	34899-3020	1					A												SALEABLE	
KEYING OPTION D, 7mm CLIP SLOT, YELLOW	34899-3013	1				D													TOOLED BUT NOT VALIDATED	
KEYING OPTION C, 7mm CLIP SLOT, YELLOW	34899-3012	1			C														TOOLED BUT NOT VALIDATED	

DESCRIPTION	COLOR	MATERIAL
PLR	NATURAL	SPS/NYLON GF20
1x3 CONNECTOR HOUSING, KEYING OPTION D 11mm CLIP SLOT	STONE GRAY	SPS/NYLON GF20
1x3 CONNECTOR HOUSING, KEYING OPTION C 11mm CLIP SLOT	DARK GRAY	SPS/NYLON GF20
1x3 CONNECTOR HOUSING, KEYING OPTION B 11mm CLIP SLOT	LIGHT GRAY	SPS/NYLON GF20
1x3 CONNECTOR HOUSING, KEYING OPTION A 11mm CLIP SLOT	BLACK	SPS/NYLON GF20
1x3 CONNECTOR HOUSING, KEYING OPTION D 11mm CLIP SLOT	YELLOW	SPS/NYLON GF20
1x3 CONNECTOR HOUSING, KEYING OPTION C 11mm CLIP SLOT	YELLOW	SPS/NYLON GF20
1x3 CONNECTOR HOUSING, KEYING OPTION B 11mm CLIP SLOT	YELLOW	SPS/NYLON GF20
1x3 CONNECTOR HOUSING, KEYING OPTION A 11mm CLIP SLOT	YELLOW	SPS/NYLON GF20
1x3 CONNECTOR HOUSING, KEYING OPTION D 7mm CLIP SLOT	STONE GRAY	SPS/NYLON GF20
1x3 CONNECTOR HOUSING, KEYING OPTION C 7mm CLIP SLOT	DARK GRAY	SPS/NYLON GF20
1x3 CONNECTOR HOUSING, KEYING OPTION B 7mm CLIP SLOT	LIGHT GRAY	SPS/NYLON GF20
1x3 CONNECTOR HOUSING, KEYING OPTION A 7mm CLIP SLOT	BLACK	SPS/NYLON GF20
1x3 CONNECTOR HOUSING, KEYING OPTION D 7mm CLIP SLOT	YELLOW	SPS/NYLON GF20
1x3 CONNECTOR HOUSING, KEYING OPTION C 7mm CLIP SLOT	YELLOW	SPS/NYLON GF20
1x3 CONNECTOR HOUSING, KEYING OPTION B 7mm CLIP SLOT	YELLOW	SPS/NYLON GF20
1x3 CONNECTOR HOUSING, KEYING OPTION A 7mm CLIP SLOT	YELLOW	SPS/NYLON GF20

BOM/APPLICABLE COMPONENTS TABLE

LEGEND TABLE

ABREVIATION	COMPONENT
A	CONNECTOR HOUSING KEYING OPTION A
B	CONNECTOR HOUSING KEYING OPTION B
C	CONNECTOR HOUSING KEYING OPTION C
D	CONNECTOR HOUSING KEYING OPTION D

THIS DRAWING CONTAINS INFORMATION THAT IS PROPRIETARY TO MOLEX ELECTRONIC TECHNOLOGIES, LLC AND SHOULD NOT BE USED WITHOUT WRITTEN PERMISSION

DIMENSION UNITS	SCALE
MM	1:1

GENERAL TOLERANCES (UNLESS SPECIFIED)

ANGULAR TOL	± 3'
4 PLACES	±
3 PLACES	±
2 PLACES	± 0.100
1 PLACE	± 0.20
0 PLACES	± 0.50

DRAFT WHERE APPLICABLE MUST REMAIN WITHIN DIMENSIONS

CURRENT REV DESC: REMOVED OBSOLETED PART NUMBERS AS PER PCN#513405

STATUS: Production
DRWN: Abhishek Gajare 2024-09-02
CHK'D: ChandrashekarS 2024-09-04
APPR: Katy Boruszewski 2024-09-06

THIRD ANGLE PROJECTION | DRAWING: D-SIZE | SERIES: 34899

molex

1.2MM 1X2, 1X3 BLADE
MINOR UPDATES TO 3-CKT BOM

PRODUCT CUSTOMER DRAWING

DOCUMENT NUMBER	DOC TYPE	DOC PART	REVISION
SD-34899-2001	PSD	001	B2

MATERIAL NUMBER	CUSTOMER	SHEET NUMBER
SEE BOM	GENERAL MARKET	10 OF 11

1x3 BLADE SEALED ASSEMBLY BOM FOR WIRE DRESS COVER INTERFACE 2 REFER WIRE DRESS COVER INTERFACE SHEET FOR DETAILS

ASSEMBLY DESCRIPTION	ASSEMBLY PART NUMBER	WIRE DRESS COVER INTERFACE OPTION																		PRODUCTION TOOL STATUS	COMMENTS
KEYING OPTION A, 40-G CLIP SLOT, BLACK	34899-3060	2																	A	CONCEPT	
KEYING OPTION A, 40-G CLIP SLOT, YELLOW	34899-3050	2																A		CONCEPT	
KEYING OPTION D, 11mm CLIP SLOT, STONE GRAY	34899-3123	2															D			OK TO TOOL	
KEYING OPTION C, 11mm CLIP SLOT, DARK GRAY	34899-3122	2														C				OK TO TOOL	
KEYING OPTION B, 11mm CLIP SLOT, LIGHT GRAY	34899-3121	2													B					SALEABLE	
KEYING OPTION A, 11mm CLIP SLOT, BLACK	34899-3120	2												A						SALEABLE	
KEYING OPTION D, 11mm CLIP SLOT, YELLOW	34899-3113	2											D							OK TO TOOL	
KEYING OPTION C, 11mm CLIP SLOT, YELLOW	34899-3112	2										C								OK TO TOOL	
KEYING OPTION B, 11mm CLIP SLOT, YELLOW	34899-3111	2									B									SALEABLE	
KEYING OPTION A, 11mm CLIP SLOT, YELLOW	34899-3110	2								A										SALEABLE	
KEYING OPTION D, 7mm CLIP SLOT, STONE GRAY	34899-3083	2							D											OK TO TOOL	
KEYING OPTION C, 7mm CLIP SLOT, DARK GRAY	34899-3082	2						C												OK TO TOOL	
KEYING OPTION B, 7mm CLIP SLOT, LIGHT GRAY	34899-3081	2					B													SALEABLE	
KEYING OPTION A, 7mm CLIP SLOT, BLACK	34899-3080	2				A														SALEABLE	
KEYING OPTION D, 7mm CLIP SLOT, YELLOW	34899-3073	2			D															OK TO TOOL	
KEYING OPTION C, 7mm CLIP SLOT, YELLOW	34899-3072	2		C																OK TO TOOL	
KEYING OPTION B, 7mm CLIP SLOT, YELLOW	34899-3071	2	B																	SALEABLE	
KEYING OPTION A, 7mm CLIP SLOT, YELLOW	34899-3070	2	A																	SALEABLE	

DESCRIPTION	COLOR	MATERIAL
PLR	NATURAL	SPS/NYLON GF20
1x3 CONNECTOR HOUSING, KEYING OPTION A 40G CLIP SLOT	BLACK	SPS/NYLON GF20
1x3 CONNECTOR HOUSING, KEYING OPTION A 40G CLIP SLOT	YELLOW	SPS/NYLON GF20
1x3 CONNECTOR HOUSING, KEYING OPTION D 11mm CLIP SLOT	STONE GRAY	SPS/NYLON GF20
1x3 CONNECTOR HOUSING, KEYING OPTION C 11mm CLIP SLOT	DARK GRAY	SPS/NYLON GF20
1x3 CONNECTOR HOUSING, KEYING OPTION B 11mm CLIP SLOT	LIGHT GRAY	SPS/NYLON GF20
1x3 CONNECTOR HOUSING, KEYING OPTION A 11mm CLIP SLOT	BLACK	SPS/NYLON GF20
1x3 CONNECTOR HOUSING, KEYING OPTION D 11mm CLIP SLOT	YELLOW	SPS/NYLON GF20
1x3 CONNECTOR HOUSING, KEYING OPTION C 11mm CLIP SLOT	YELLOW	SPS/NYLON GF20
1x3 CONNECTOR HOUSING, KEYING OPTION B 11mm CLIP SLOT	YELLOW	SPS/NYLON GF20
1x3 CONNECTOR HOUSING, KEYING OPTION A 11mm CLIP SLOT	YELLOW	SPS/NYLON GF20
1x3 CONNECTOR HOUSING, KEYING OPTION D 7mm CLIP SLOT	STONE GRAY	SPS/NYLON GF20
1x3 CONNECTOR HOUSING, KEYING OPTION C 7mm CLIP SLOT	DARK GRAY	SPS/NYLON GF20
1x3 CONNECTOR HOUSING, KEYING OPTION B 7mm CLIP SLOT	LIGHT GRAY	SPS/NYLON GF20
1x3 CONNECTOR HOUSING, KEYING OPTION A 7mm CLIP SLOT	BLACK	SPS/NYLON GF20
1x3 CONNECTOR HOUSING, KEYING OPTION D 7mm CLIP SLOT	YELLOW	SPS/NYLON GF20
1x3 CONNECTOR HOUSING, KEYING OPTION C 7mm CLIP SLOT	YELLOW	SPS/NYLON GF20
1x3 CONNECTOR HOUSING, KEYING OPTION B 7mm CLIP SLOT	YELLOW	SPS/NYLON GF20
1x3 CONNECTOR HOUSING, KEYING OPTION A 7mm CLIP SLOT	YELLOW	SPS/NYLON GF20

BOM/APPLICABLE COMPONENTS TABLE

LEGEND TABLE	
ABREVIATION	COMPONENT
A	CONNECTOR HOUSING KEYING OPTION A
B	CONNECTOR HOUSING KEYING OPTION B
C	CONNECTOR HOUSING KEYING OPTION C
D	CONNECTOR HOUSING KEYING OPTION D

THIS DRAWING CONTAINS INFORMATION THAT IS PROPRIETARY TO MOLEX ELECTRONIC TECHNOLOGIES, LLC AND SHOULD NOT BE USED WITHOUT WRITTEN PERMISSION

DIMENSION UNITS	SCALE
MM	1:1

GENERAL TOLERANCES (UNLESS SPECIFIED)

ANGULAR TOL	± 3°
4 PLACES	±
3 PLACES	±
2 PLACES	± 0.100
1 PLACE	± 0.20
0 PLACES	± 0.50

DRAFT WHERE APPLICABLE MUST REMAIN WITHIN DIMENSIONS

CURRENT REV DESC: REMOVED OBSOLETED PART NUMBERS AS PER PCN#513405

STATUS: Production
DRWN: Abhishek Gajare 2024-09-02
CHK'D: ChandrashekarS 2024-09-04
APPR: Katy Boruszewski 2024-09-06

THIRD ANGLE PROJECTION | DRAWING: D-SIZE | SERIES: 34899

molex

1.2MM 1X2, 1X3 BLADE
MINOR UPDATES TO 3-CKT BOM

PRODUCT CUSTOMER DRAWING

DOCUMENT NUMBER	DOC TYPE	DOC PART	REVISION
SD-34899-2001	PSD	001	B2

MATERIAL NUMBER	CUSTOMER	SHEET NUMBER
SEE BOM	GENERAL MARKET	11 OF 11

FORMAT TC-Sym-HD
REVISION: B
DATE: 2022/8/31

TABLE OF CONTENTS

SHEET NO.	SHEET DESCRIPTION
1	NOTES
2	1x4 BLADE SEALED ASSEMBLY KEYING CONFIGURATIONS
3	1x6 BLADE SEALED ASSEMBLY KEYING CONFIGURATIONS
4	CLIP-SLOT CONFIGURATIONS
5	BLADE SEALED ASSEMBLY
6	CONNECTION SYSTEM PACKAGING
7	WIRE DRESS COVER INTERFACE OPTIONS
8	1x4 BLADE SEALED ASSEMBLY BOM INTERFACE OPTION 1
9	1x4 BLADE SEALED ASSEMBLY BOM INTERFACE OPTION 2
10	1x6 BLADE SEALED ASSEMBLY BOM INTERFACE OPTION 1
11	1x6 BLADE SEALED ASSEMBLY BOM INTERFACE OPTION 2

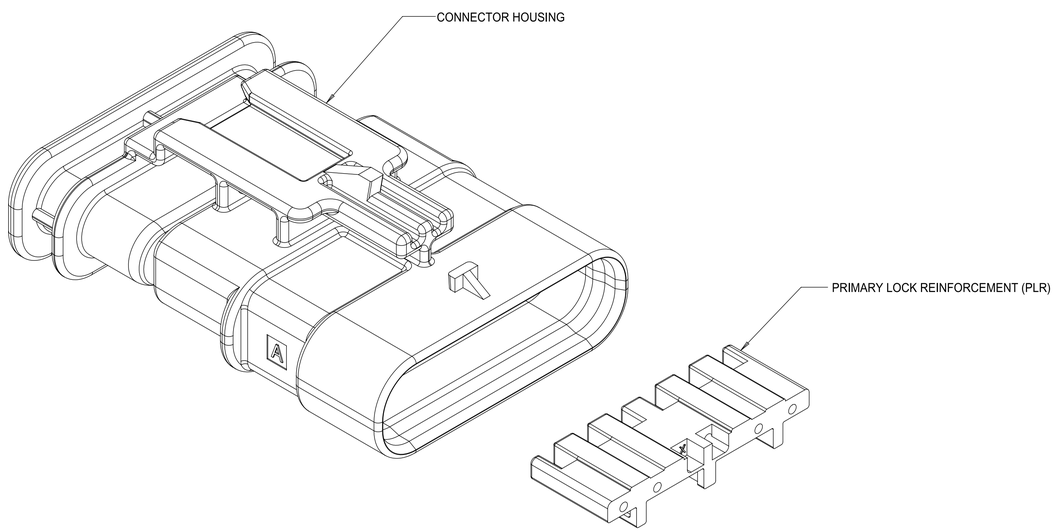

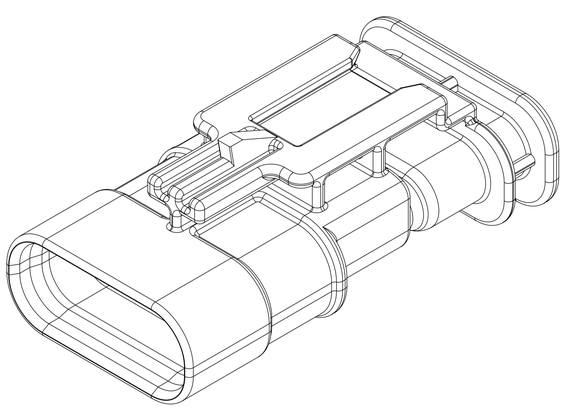

1x4 BLADE SEALED ASSEMBLY

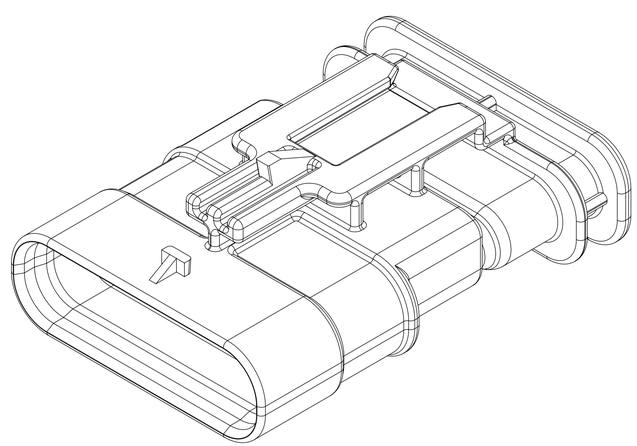

1x6 BLADE SEALED ASSEMBLY

NOTES: VALID UNLESS OTHERWISE SPECIFIED

1. GENERAL:
a. APPLICATION SPECIFICATION SEE: AS-34900-0001
CONTAINS: PRODUCT INTRODUCTION, PRODUCT SUMMARY, CONNECTOR ASSEMBLY, PACKAGING INFORMATION, CONNECTOR MATING, SERVICE INSTRUCTIONS, ELECTRICAL CONTINUITY CHECKING, CRIMPING, AND TROUBLESHOOTING.
b. PRODUCT SPECIFICATION SEE: PS-34900-0001
CONTAINS: PRODUCT INTRODUCTION, PRODUCT SUMMARY, RATINGS (CURRENT, TEMPERATURE, SEALING, AND FLAMMABILITY), AND PRODUCT VALIDATION.
c. PACKAGING SPECIFICATION PER MOLEX DRAWING: PK-31301-898
d. PARTS MUST BE IN COMPLIANCE TO MOLEX CHEMICAL SUBSTANCES FOR PRODUCTS AND PACKAGING SPECIFICATION: QEHS-699000-301
e. DATA MUST BE SUBMITTED UNDER THE MOLEX PART NUMBER TO IMDS (COMPANY ID#13255)

2. DESIGN - MATERIALS:
a. SEE BOM TABLE

3. DESIGN - GEOMETRY:
a. THIS IS A 100% CAD GENERATED PART. THE CAD MATHEMATICAL DATA IS THE MASTER FOR THIS PART. FOR DIMENSIONAL OR ANY INFORMATION NOT SHOWN ON THIS DRAWING, ANALYZE THE CAD MODEL.
b. GEOMETRIC DIMENSIONS AND TOLERANCES PER ASME Y14.5M - 1994
c. EDGES AND UNDIMENSIONED DETAILS PER ISO13715
d. CORNERS SHOWN AS SHARP TO BE R 0.2 MAX.
e. LETTERING SHALL BE 0.15 MAX RAISED IN 0.25 MAX RECESS PAD. THIS INCLUDES RECYCLING CODE, CAVITY ID, VENDOR IDENTIFICATION, AND CUSTOMER MATERIAL NUMBER.
f. VISUAL DEFECTS SHALL MEET COSMETIC STANDARD PS-45499-002 (Class B) CAD MODEL.
g. LASER MARKING:
1. PART NUMBER
2. DAY OF THE YEAR
3. SHIFT
4. YEAR

REV	DESCRIPTION
C1	MINOR BOM UPDATE-OBSOLETE PART NUMBER
C	OBSOLETE PART NUMBER
B17	ADDED NOTE ON SHARKFIN PRESENCE
B16	NX-REMASTERING FROM MODEL MANAGER CHANGED PN STATUSES TO OBSOLETE
B15	UPDATED BALLOONS 2-1 & 2-2 ON SHEET 7
B14	UPDATED PARTS TO SALEABLE
B13	RELEASED PRIMARY KEYS NON-SIR SALEABLE
B12	UPDATED PLR LOCK UP GEOMETRY
B11	UPDATED WDC INTERFACE PART# TO TOOLED BUT NOT VALIDATED
B10	UPDATED TOLERANCES WDC FEATURES
B9	1X4, 1X6 PART # WIRE DRESS COVER INTERFACE FEATURES OK TO TOOL
B8	1X4 40G CLIP-SLOT OK TO TOOL
B7	1X4 PART # UPDATED TO "TOOLED BUT NOT VALIDATED"
B6	ADDED 40G CLIP-SLOT PART NUMBERS
B5	BOM CORRECTIONS AND UPDATES
B4	BOM CORRECTIONS AND UPDATES
B3	1x4, 1x6 NON-SIR PART# OK TO TOOL
B2	1x6 11mm CLIP SLOT PART # OK TO TOOL
B1	1x6 11mm CLIP SLOT PART NUMBERS ADDED
B	ADDED 1x4 INFORMATION
A	OK TO TOOL

INSPECTION BALLOON NUMBER LOG

PER DRAWING REVISION: B12

LAST BALLOON NUMBER USED: WDC2-10

ADDED BALLON NUMBERS: WDC2-1 - WDC2-10

REMOVED BALLON NUMBERS:

THIS DRAWING CONTAINS INFORMATION THAT IS PROPRIETARY TO MOLEX ELECTRONIC TECHNOLOGIES, LLC AND SHOULD NOT BE USED WITHOUT WRITTEN PERMISSION

DIMENSION UNITS	SCALE
mm	4:1

GENERAL TOLERANCES (UNLESS SPECIFIED)		
ANGULAR TOL	±	3 °
4 PLACES	±	0
3 PLACES	±	0
2 PLACES	±	0.1
1 PLACE	±	0.2
0 PLACES	±	0.5

DRAFT WHERE APPLICABLE MUST REMAIN WITHIN DIMENSIONS

CURRENT REV DESC: MINOR BOM UPDATE - OBSOLETE PART NUMBER

EC NO:
DRWN: Gajare Abhishek Murugesh 16-Jan-2023
CHK'D: Graham Elliott 16-Jun-2023
APPR: Katy Boruszewski 16-Jun-2023

INITIAL REVISION:
DRWN: MVANSLAMBROU 2012/07/13
APPR: VKOSHY 2012/07/24

THIRD ANGLE PROJECTION | DRAWING: D-SIZE | SERIES: 34899

molex

1.2MM 1X4, 1X6 BLADE SEALED ASSEMBLY CABLE SEAL 639764 - REMOVED CPA3 AND REPLACED WITH CPA2 AGAIN 64

PRODUCT SALES DRAWING

DOCUMENT NUMBER	DOC TYPE	DOC PART	REVISION
SD-34899-6001	PSD	001	C1

MATERIAL NUMBER	CUSTOMER	SHEET NUMBER
SEE TABLE	GENERAL MARKET	1 OF 11

DOCUMENT STATUS	Production	RELEASE DATE	16-Jun-2023 11:09:22

FORMAT: model-driven2D
REVISION: J
DATE: 2020/01/10

1x4 BLADE SEALED ASSEMBLY KEYING CONFIGURATIONS. FOR PART NUMBERS REFER TO BOM SHEET.

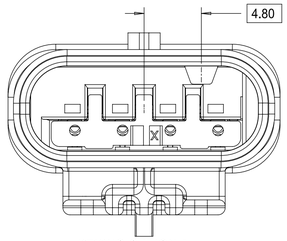

KEYING OPTION A

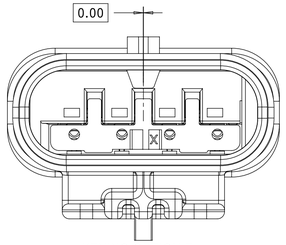

KEYING OPTION F

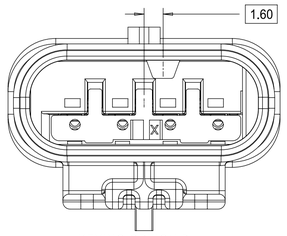

KEYING OPTION B

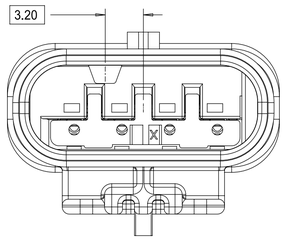

KEYING OPTION G

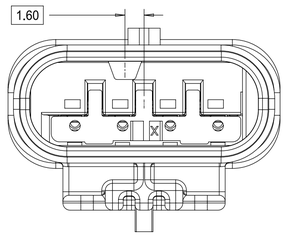

KEYING OPTION C

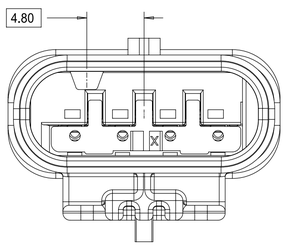

KEYING OPTION D

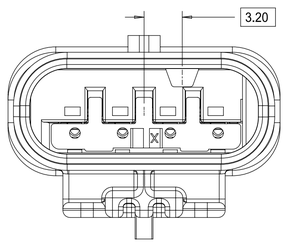

KEYING OPTION E

THIS DRAWING CONTAINS INFORMATION THAT IS PROPRIETARY TO MOLEX ELECTRONIC TECHNOLOGIES, LLC AND SHOULD NOT BE USED WITHOUT WRITTEN PERMISSION

DIMENSION UNITS	SCALE
mm	4:1

GENERAL TOLERANCES (UNLESS SPECIFIED)

ANGULAR TOL	±	3 °
4 PLACES	±	0
3 PLACES	±	0
2 PLACES	±	0.1
1 PLACE	±	0.2
0 PLACES	±	0.5

DRAFT WHERE APPLICABLE MUST REMAIN WITHIN DIMENSIONS

CURRENT REV DESC: MINOR BOM UPDATE - OBSOLETE PART NUMBER

EC NO:

DRWN:	Gajare Abhishek Murugesh	16-Jan-2023
CHK'D:	Graham Elliott	16-Jun-2023
APPR:	Katy Boruszewski	16-Jun-2023

INITIAL REVISION:

DRWN:	MVANSLAMBROU	2012/07/13
APPR:	VKOSHY	2012/07/24

molex

1.2MM 1X4, 1X6 BLADE SEALED ASSEMBLY CABLE SEAL 639764 - REMOVED CPA3 AND REPLACED WITH CPA2 AGAIN 64

PRODUCT SALES DRAWING

DOCUMENT NUMBER	DOC TYPE	DOC PART	REVISION
SD-34899-6001	PSD	001	C1

THIRD ANGLE PROJECTION	DRAWING	SERIES	MATERIAL NUMBER	CUSTOMER	SHEET NUMBER
	D-SIZE	34899	SEE TABLE	GENERAL MARKET	2 OF 11

DOCUMENT STATUS	Production	RELEASE DATE	16-Jun-2023 11:09:22

1x6 BLADE SEALED ASSEMBLY KEYING CONFIGURATIONS. FOR PART NUMBERS REFER TO BOM SHEET.

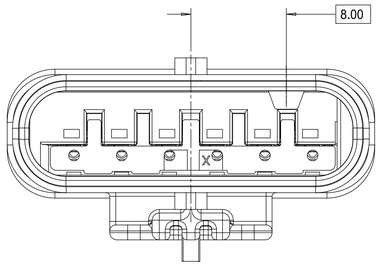

KEYING OPTION A

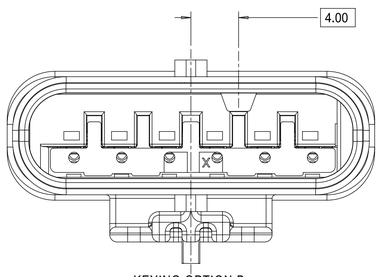

KEYING OPTION B

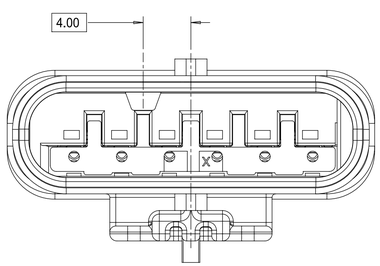

KEYING OPTION C

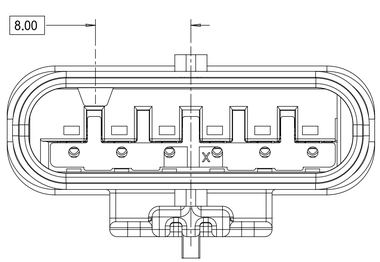

KEYING OPTION D

THIS DRAWING CONTAINS INFORMATION THAT IS PROPRIETARY TO MOLEX ELECTRONIC TECHNOLOGIES, LLC AND SHOULD NOT BE USED WITHOUT WRITTEN PERMISSION

DIMENSION UNITS	SCALE
mm	4:1

GENERAL TOLERANCES (UNLESS SPECIFIED)

ANGULAR TOL	±	3 °
4 PLACES	±	0
3 PLACES	±	0
2 PLACES	±	0.1
1 PLACE	±	0.2
0 PLACES	±	0.5

DRAFT WHERE APPLICABLE MUST REMAIN WITHIN DIMENSIONS

CURRENT REV DESC: MINOR BOM UPDATE - OBSOLETE PART NUMBER

EC NO:

DRWN:	Gajare Abhishek Murugesh	16-Jan-2023
CHK'D:	Graham Elliott	16-Jun-2023
APPR:	Katy Boruszewski	16-Jun-2023

INITIAL REVISION:

DRWN:	MVANSLAMBROU	2012/07/13
APPR:	VKOSHY	2012/07/24

THIRD ANGLE PROJECTION | DRAWING: D-SIZE | SERIES: 34899

molex

1.2MM 1X4, 1X6 BLADE SEALED ASSEMBLY CABLE SEAL 639764 - REMOVED CPA3 AND REPLACED WITH CPA2 AGAIN 64

PRODUCT SALES DRAWING

DOCUMENT NUMBER	DOC TYPE	DOC PART	REVISION
SD-34899-6001	PSD	001	C1

MATERIAL NUMBER	CUSTOMER	SHEET NUMBER
SEE TABLE	GENERAL MARKET	3 OF 11

DOCUMENT STATUS	Production	RELEASE DATE	16-Jun-2023 11:09:22

TEMPLATE FORMAT: A3 LANDSCAPE
REVISION: J
DATE: 2020/01/16

CLIP-SLOT CONFIGURATIONS. FOR PART NUMBERS REFER TO BOM SHEET.

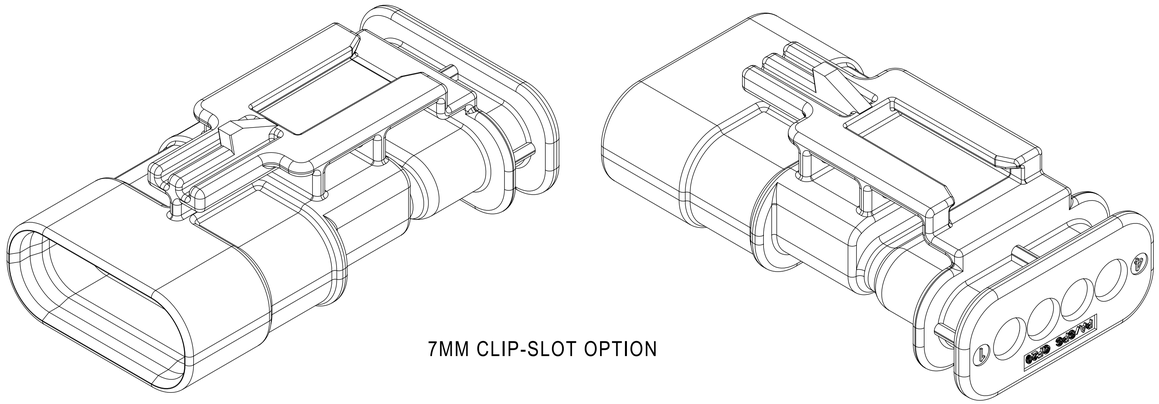

7MM CLIP-SLOT OPTION

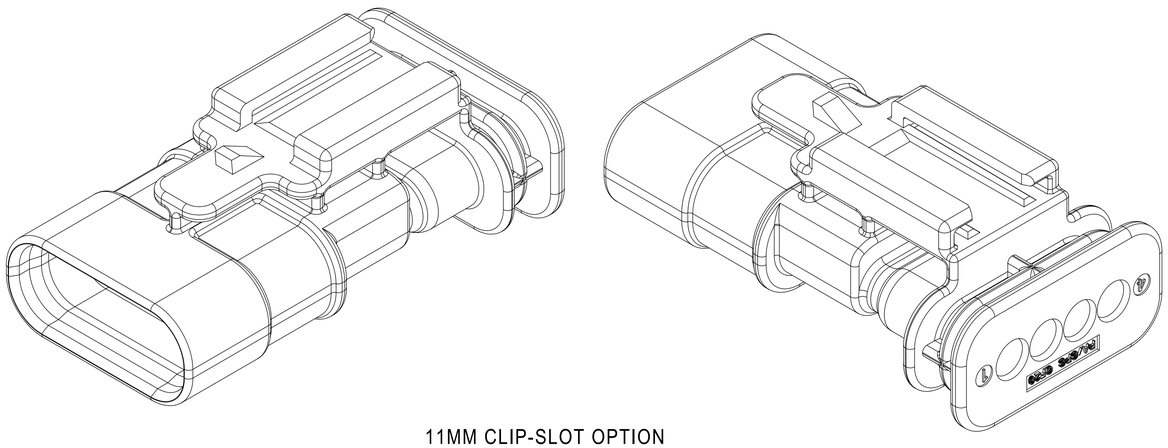

11MM CLIP-SLOT OPTION

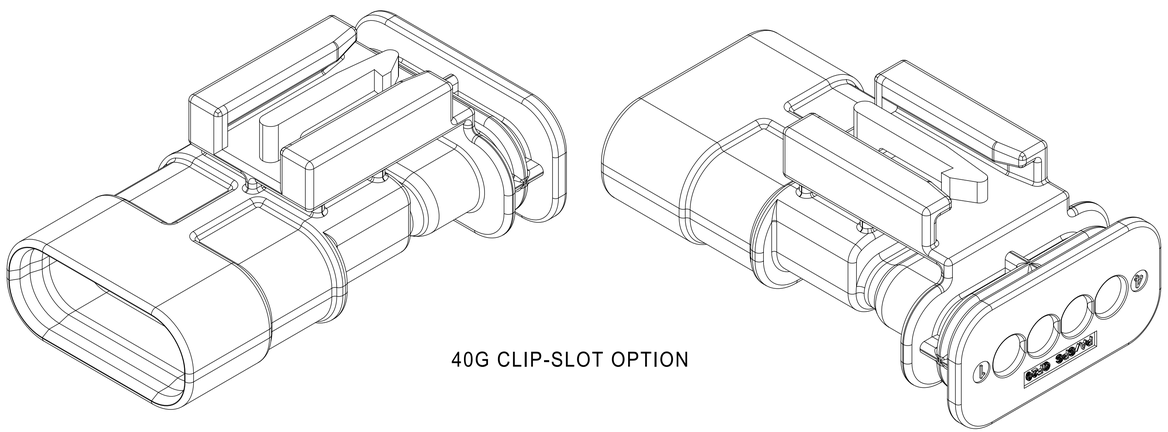

40G CLIP-SLOT OPTION

THIS DRAWING CONTAINS INFORMATION THAT IS PROPRIETARY TO MOLEX ELECTRONIC TECHNOLOGIES, LLC AND SHOULD NOT BE USED WITHOUT WRITTEN PERMISSION

DIMENSION UNITS	SCALE
mm	4:1

GENERAL TOLERANCES (UNLESS SPECIFIED)		
ANGULAR TOL	±	3 °
4 PLACES	±	0
3 PLACES	±	0
2 PLACES	±	0.1
1 PLACE	±	0.2
0 PLACES	±	0.5

DRAFT WHERE APPLICABLE MUST REMAIN WITHIN DIMENSIONS

CURRENT REV DESC: MINOR BOM UPDATE - OBSOLETE PART NUMBER

EC NO:

DRWN:	Gajare Abhishek Murugesh	16-Jan-2023
CHK'D:	Graham Elliott	16-Jun-2023
APPR:	Katy Boruszewski	16-Jun-2023

INITIAL REVISION:

DRWN:	MVANSLAMBROU	2012/07/13
APPR:	VKOSHY	2012/07/24

molex

1.2MM 1X4, 1X6 BLADE SEALED ASSEMBLY CABLE SEAL 639764 - REMOVED CPA3 AND REPLACED WITH CPA2 AGAIN 64

PRODUCT SALES DRAWING

DOCUMENT NUMBER	DOC TYPE	DOC PART	REVISION
SD-34899-6001	PSD	001	C1

THIRD ANGLE PROJECTION	DRAWING	SERIES	MATERIAL NUMBER	CUSTOMER	SHEET NUMBER
	D-SIZE	34899	SEE TABLE	GENERAL MARKET	4 OF 11

DOCUMENT STATUS	Production	RELEASE DATE	16-Jun-2023 11:09:22

BLADE SEALED ASSEMBLY

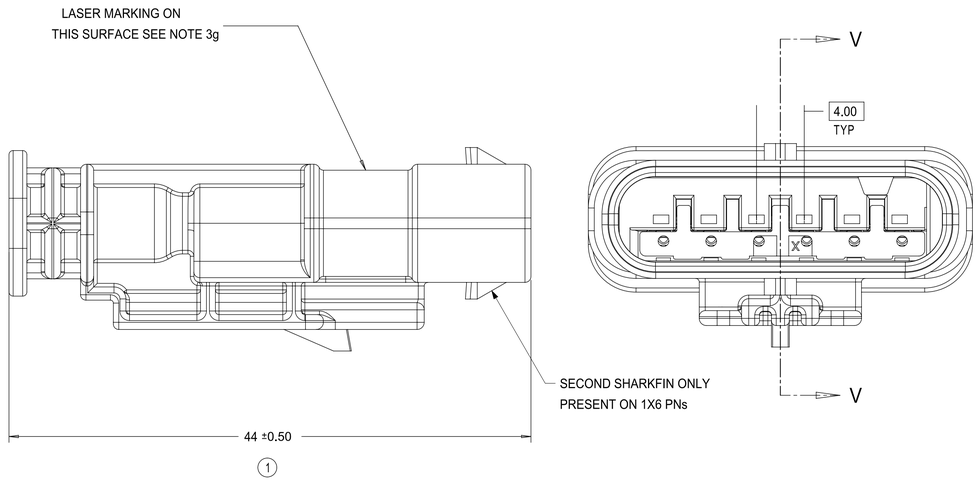

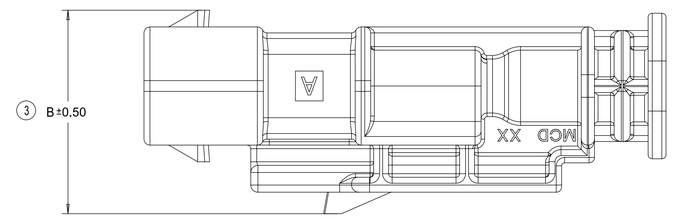

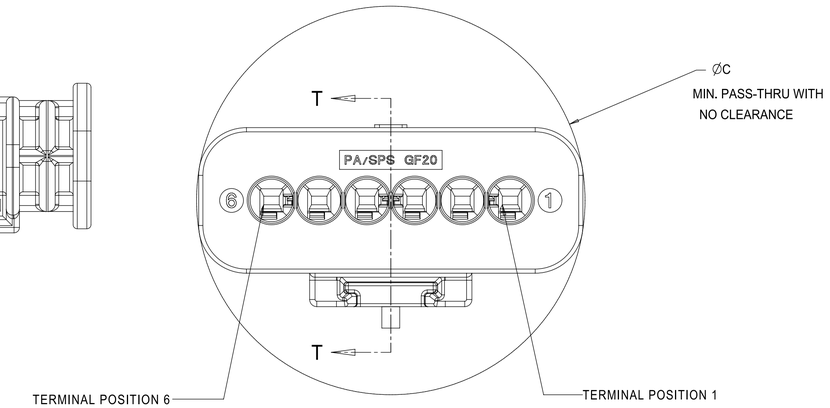

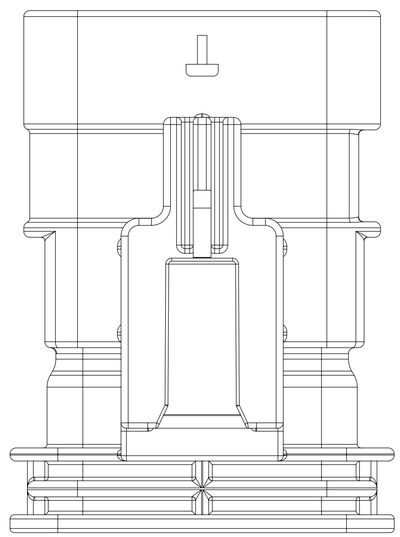

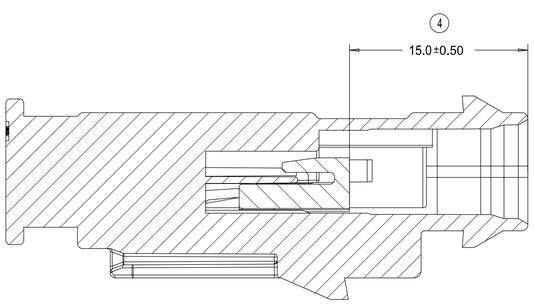

SECTION V-V

PRIMARY LOCK REINFORCEMENT (PLR) SHOWN
IN THE PRE-STAGED POSITION

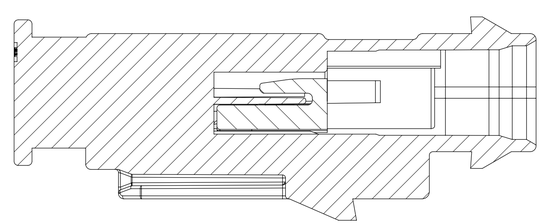

SECTION T-T

PRIMARY LOCK REINFORCEMENT (PLR) SHOWN
IN THE FINAL-LOCK POSITION

1x6 BLADE SEALED ASSEMBLY, 40G CLIP SLOT	17.5	32.75
1x6 BLADE SEALED ASSEMBLY, 11mm CLIP SLOT	16	32.75
1x6 BLADE SEALED ASSEMBLY, 7mm CLIP SLOT	17.25	32.75
1x4 BLADE SEALED ASSEMBLY, 40G CLIP SLOT	17.5	25.25
1x4 BLADE SEALED ASSEMBLY, 11mm CLIP SLOT	16	24.75
1x4 BLADE SEALED ASSEMBLY, 7mm CLIP SLOT	17.25	24.75
CONFIGURATION	B	C
CHARTED DIMENSIONS		

THIS DRAWING CONTAINS INFORMATION THAT IS PROPRIETARY TO MOLEX ELECTRONIC TECHNOLOGIES, LLC AND SHOULD NOT BE USED WITHOUT WRITTEN PERMISSION

DIMENSION UNITS	SCALE
mm	4:1

GENERAL TOLERANCES (UNLESS SPECIFIED)

ANGULAR TOL	±	3 °
4 PLACES	±	0
3 PLACES	±	0
2 PLACES	±	0.1
1 PLACE	±	0.2
0 PLACES	±	0.5

DRAFT WHERE APPLICABLE MUST REMAIN WITHIN DIMENSIONS

CURRENT REV DESC: MINOR BOM UPDATE - OBSOLETE PART NUMBER

EC NO:

DRWN:	Gajare Abhishek Murugesh	16-Jan-2023
CHK'D:	Graham Elliott	16-Jun-2023
APPR:	Katy Boruszewski	16-Jun-2023

INITIAL REVISION:

DRWN:	MVANSLAMBROU	2012/07/13
APPR:	VKOSHY	2012/07/24

molex

1.2MM 1X4, 1X6 BLADE
SEALED ASSEMBLY CABLE SEAL 639764 -
REMOVED CPA3 AND REPLACED WITH CPA2 AGAIN
64

PRODUCT SALES DRAWING

DOCUMENT NUMBER	DOC TYPE	DOC PART	REVISION
SD-34899-6001	PSD	001	C1

THIRD ANGLE PROJECTION	DRAWING	SERIES	MATERIAL NUMBER	CUSTOMER	SHEET NUMBER
	D-SIZE	34899	SEE TABLE	GENERAL MARKET	5 OF 11

DOCUMENT STATUS	Production	RELEASE DATE	16-Jun-2023 11:09:22

CONNECTION SYSTEM PACKAGING

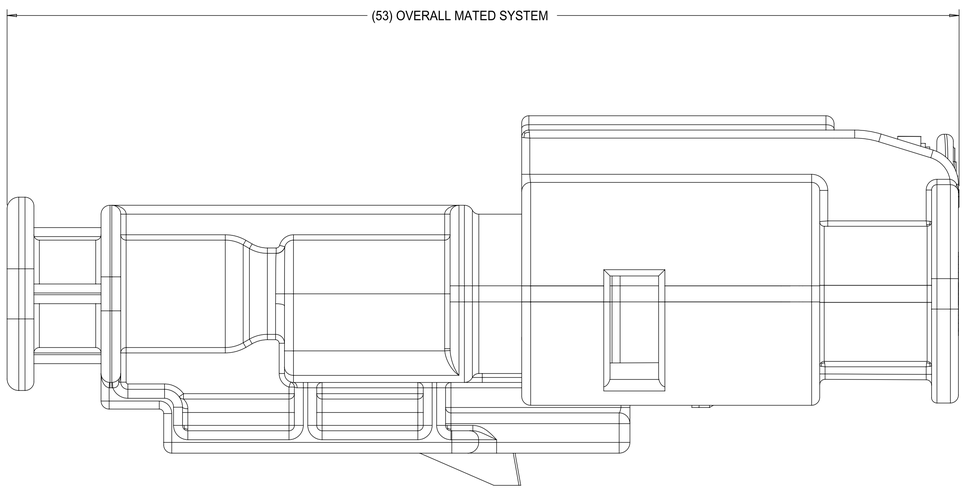

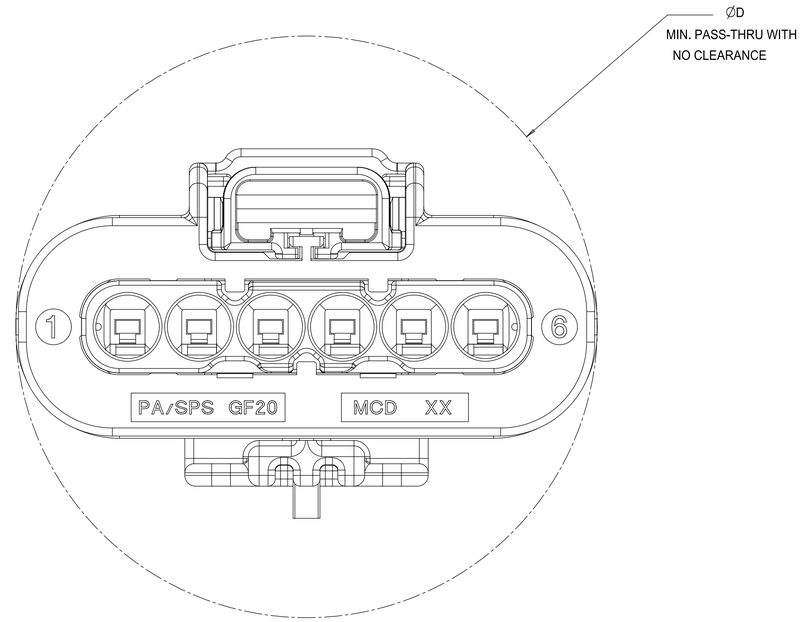

MODEL USED "AM-120-S-006-1-Z01"

1x6 RECEPTACLE MATED TO 1x6 BLADE, 40 CLIP SLOT	TBD
1x6 RECEPTACLE MATED TO 1x6 BLADE, 11mm CLIP SLOT	33.5
1x6 RECEPTACLE MATED TO 1x6 BLADE, 7mm CLIP SLOT	33.5
1x4 RECEPTACLE MATED TO 1x4 BLADE, 40G CLIP SLOT	25.50
1x4 RECEPTACLE MATED TO 1x4 BLADE, 11mm CLIP SLOT	25.50
1x4 RECEPTACLE MATED TO 1x4 BLADE, 7mm CLIP SLOT	25.50
1.2mm CONNECTION SYSTEM CONFIGURATION	D
CHARTED DIMENSIONS	

THIS DRAWING CONTAINS INFORMATION THAT IS PROPRIETARY TO MOLEX ELECTRONIC TECHNOLOGIES, LLC AND SHOULD NOT BE USED WITHOUT WRITTEN PERMISSION

DIMENSION UNITS	SCALE
mm	6:1

GENERAL TOLERANCES (UNLESS SPECIFIED)

ANGULAR TOL	±	3 °
4 PLACES	±	0
3 PLACES	±	0
2 PLACES	±	0.1
1 PLACE	±	0.2
0 PLACES	±	0.5

DRAFT WHERE APPLICABLE MUST REMAIN WITHIN DIMENSIONS

CURRENT REV DESC: MINOR BOM UPDATE - OBSOLETE PART NUMBER

EC NO:

DRWN:	Gajare Abhishek Murugesh	16-Jan-2023
CHK'D:	Graham Elliott	16-Jun-2023
APPR:	Katy Boruszewski	16-Jun-2023

INITIAL REVISION:

DRWN:	MVANSLAMBROU	2012/07/13
APPR:	VKOSHY	2012/07/24

molex

1.2MM 1X4, 1X6 BLADE
SEALED ASSEMBLY CABLE SEAL 639764 - REMOVED CPA3 AND REPLACED WITH CPA2 AGAIN 64

PRODUCT SALES DRAWING

DOCUMENT NUMBER	DOC TYPE	DOC PART	REVISION
SD-34899-6001	PSD	001	C1

THIRD ANGLE PROJECTION	DRAWING	SERIES	MATERIAL NUMBER	CUSTOMER	SHEET NUMBER
	D-SIZE	34899	SEE TABLE	GENERAL MARKET	6 OF 11

DOCUMENT STATUS	Production	RELEASE DATE	16-Jun-2023 11:09:22

FORMAT: molex-dcsm-C
REVISION: J
DATE: 2006/11/14

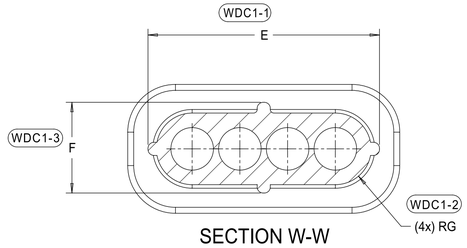

SECTION W-W

6 CIRCUIT	30.8	10.8	5.4	27.4	7.6	3.0
4 CIRCUIT	22.8	10.8	5.4	19.4	7.6	3.0
CONFIGURATION	A	B	C	E	F	G

CHARTED DIMENSIONS

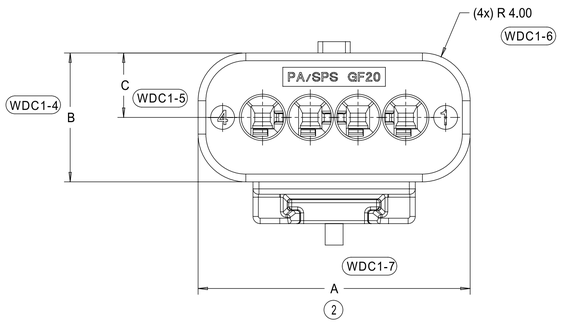

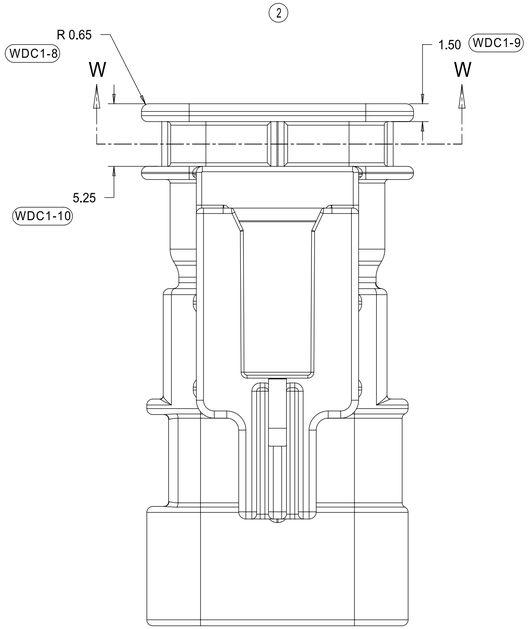

WIRE DRESS COVER
INTERFACE OPTION 1
WIRE DRESS COVERS
NOT AVAILABLE

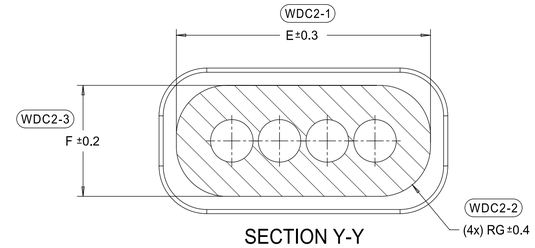

SECTION Y-Y

6 CIRCUIT	32.2	12.2	6.1	29.3	9.3	4.2
4 CIRCUIT	24.2	12.2	6.1	21.3	9.3	4.2
CONFIGURATION	A	B	C	E	F	G

CHARTED DIMENSIONS

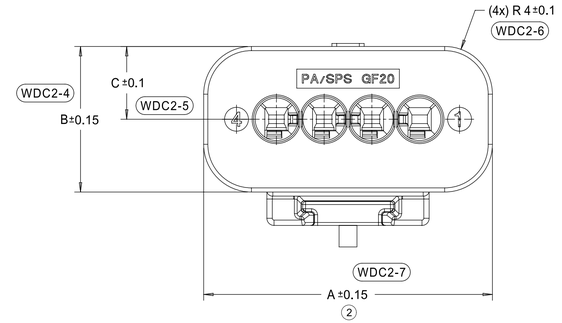

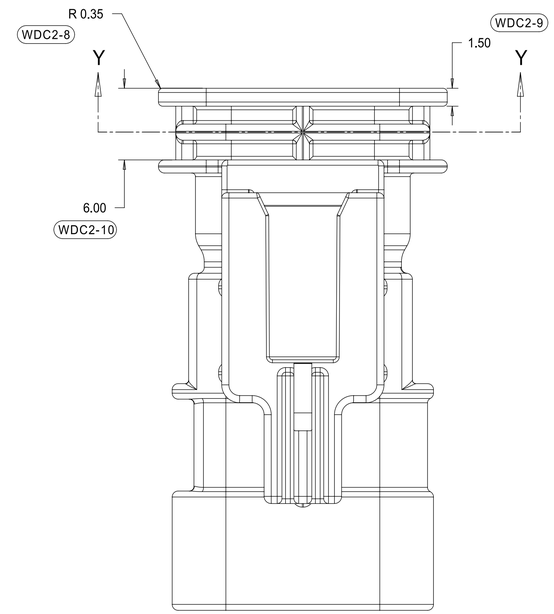

WIRE DRESS COVER
INTERFACE OPTION 2
BASED ON HIRSCHMANN INTERFACE
DRAWING 808-012-xxx REV B5

THIS DRAWING CONTAINS INFORMATION THAT IS PROPRIETARY TO MOLEX ELECTRONIC TECHNOLOGIES, LLC AND SHOULD NOT BE USED WITHOUT WRITTEN PERMISSION

DIMENSION UNITS	SCALE
mm	4:1

GENERAL TOLERANCES (UNLESS SPECIFIED)

ANGULAR TOL	±	3 °
4 PLACES	±	0
3 PLACES	±	0
2 PLACES	±	0.1
1 PLACE	±	0.2
0 PLACES	±	0.5

DRAFT WHERE APPLICABLE MUST REMAIN WITHIN DIMENSIONS

CURRENT REV DESC: MINOR BOM UPDATE - OBSOLETE PART NUMBER

EC NO:
DRWN: Gajare Abhishek Murugesh 16-Jan-2023
CHK'D: Graham Elliott 16-Jun-2023
APPR: Katy Boruszewski 16-Jun-2023

INITIAL REVISION:
DRWN: MVANSLAMBROU 2012/07/13
APPR: VKOSHY 2012/07/24

molex

1.2MM 1X4, 1X6 BLADE
SEALED ASSEMBLY CABLE SEAL 639764 - REMOVED CPA3 AND REPLACED WITH CPA2 AGAIN 64

PRODUCT SALES DRAWING

DOCUMENT NUMBER	DOC TYPE	DOC PART	REVISION
SD-34899-6001	PSD	001	C1

THIRD ANGLE PROJECTION	DRAWING	SERIES	MATERIAL NUMBER	CUSTOMER	SHEET NUMBER
	D-SIZE	34899	SEE TABLE	GENERAL MARKET	7 OF 11

DOCUMENT STATUS	Production	RELEASE DATE	16-Jun-2023 11:09:22

1x4 BLADE SEALED ASSEMBLY BOM FOR WIRE DRESS COVER INTERFACE 1 REFER WIRE DRESS INTERFACE SHEET FOR DETAILS

ASSEMBLY DESCRIPTION	ASSEMBLY PART NUMBER	PRODUCTION TOOL STATUS	COMMENTS
KEYING OPTION G, 11mm CLIP SLOT, LIGHT GRAY	34899-4043	CONCEPT	
KEYING OPTION F, 11mm CLIP SLOT, BLACK	34899-4042	CONCEPT	
KEYING OPTION E, 11mm CLIP SLOT, DARK GRAY	34899-4041	CONCEPT	
KEYING OPTION D, 11mm CLIP SLOT, LIGHT GRAY	34899-4040	CONCEPT	
KEYING OPTION C, 11mm CLIP SLOT, DARK GRAY	34899-4039	OBSOLETE	
KEYING OPTION B, 11mm CLIP SLOT, STONE GRAY	34899-4038	OBSOLETE	
KEYING OPTION A, 11mm CLIP SLOT, BLACK	34899-4037	OBSOLETE	
KEYING OPTION G, 11mm CLIP SLOT, YELLOW	34899-4036	CONCEPT	
KEYING OPTION F, 11mm CLIP SLOT, YELLOW	34899-4035	CONCEPT	
KEYING OPTION E, 11mm CLIP SLOT, YELLOW	34899-4034	CONCEPT	
KEYING OPTION D, 11mm CLIP SLOT, YELLOW	34899-4033	CONCEPT	
KEYING OPTION C, 11mm CLIP SLOT, YELLOW	34899-4032	CONCEPT	
KEYING OPTION B, 11mm CLIP SLOT, YELLOW	34899-4031	CONCEPT	
KEYING OPTION A, 11mm CLIP SLOT, YELLOW	34899-4030	CONCEPT	
KEYING OPTION G, 7mm CLIP SLOT, LIGHT GRAY	34899-4026	OBSOLETE	
KEYING OPTION F, 7mm CLIP SLOT, BLACK	34899-4025	OBSOLETE	
KEYING OPTION E, 7mm CLIP SLOT, DARK GRAY	34899-4024	OBSOLETE	
KEYING OPTION D, 7mm CLIP SLOT, LIGHT GRAY	34899-4023	OBSOLETE	
KEYING OPTION C, 7mm CLIP SLOT, DARK GRAY	34899-4022	OBSOLETE	
KEYING OPTION B, 7mm CLIP SLOT, STONE GRAY	34899-4021	OBSOLETE	
KEYING OPTION A, 7mm CLIP SLOT, BLACK	34899-4020	OBSOLETE	
KEYING OPTION G, 7mm CLIP SLOT, YELLOW	34899-4016	OBSOLETE	
KEYING OPTION F, 7mm CLIP SLOT, YELLOW	34899-4015	OBSOLETE	
KEYING OPTION E, 7mm CLIP SLOT, YELLOW	34899-4014	OBSOLETE	
KEYING OPTION D, 7mm CLIP SLOT, YELLOW	34899-4013	OBSOLETE	
KEYING OPTION C, 7mm CLIP SLOT, YELLOW	34899-4012	OBSOLETE	
KEYING OPTION B, 7mm CLIP SLOT, YELLOW	34899-4011	OBSOLETE	
KEYING OPTION A, 7mm CLIP SLOT, YELLOW	34899-4010	OBSOLETE	

DESCRIPTION	COLOR	MATERIAL
PLR	NATURAL	SPS/NYLON GF20
1x4 CONNECTOR HOUSING, KEYING OPTION G 11mm CLIP SLOT	LIGHT GRAY	SPS/NYLON GF20
1x4 CONNECTOR HOUSING, KEYING OPTION F 11mm CLIP SLOT	BLACK	SPS/NYLON GF20
1x4 CONNECTOR HOUSING, KEYING OPTION E 11mm CLIP SLOT	DARK GRAY	SPS/NYLON GF20
1x4 CONNECTOR HOUSING, KEYING OPTION D 11mm CLIP SLOT	LIGHT GRAY	SPS/NYLON GF20
1x4 CONNECTOR HOUSING, KEYING OPTION C 11mm CLIP SLOT	DARK GRAY	SPS/NYLON GF20
1x4 CONNECTOR HOUSING, KEYING OPTION B 11mm CLIP SLOT	STONE GRAY	SPS/NYLON GF20
1x4 CONNECTOR HOUSING, KEYING OPTION A 11mm CLIP SLOT	BLACK	SPS/NYLON GF20
1x4 CONNECTOR HOUSING, KEYING OPTION G 11mm CLIP SLOT	YELLOW	SPS/NYLON GF20
1x4 CONNECTOR HOUSING, KEYING OPTION F 11mm CLIP SLOT	YELLOW	SPS/NYLON GF20
1x4 CONNECTOR HOUSING, KEYING OPTION E 11mm CLIP SLOT	YELLOW	SPS/NYLON GF20
1x4 CONNECTOR HOUSING, KEYING OPTION D 11mm CLIP SLOT	YELLOW	SPS/NYLON GF20
1x4 CONNECTOR HOUSING, KEYING OPTION C 11mm CLIP SLOT	YELLOW	SPS/NYLON GF20
1x4 CONNECTOR HOUSING, KEYING OPTION B 11mm CLIP SLOT	YELLOW	SPS/NYLON GF20
1x4 CONNECTOR HOUSING, KEYING OPTION A 11mm CLIP SLOT	YELLOW	SPS/NYLON GF20
1x4 CONNECTOR HOUSING, KEYING OPTION G 7mm CLIP SLOT	LIGHT GRAY	SPS/NYLON GF20
1x4 CONNECTOR HOUSING, KEYING OPTION F 7mm CLIP SLOT	BLACK	SPS/NYLON GF20
1x4 CONNECTOR HOUSING, KEYING OPTION E 7mm CLIP SLOT	DARK GRAY	SPS/NYLON GF20
1x4 CONNECTOR HOUSING, KEYING OPTION D 7mm CLIP SLOT	LIGHT GRAY	SPS/NYLON GF20
1x4 CONNECTOR HOUSING, KEYING OPTION C 7mm CLIP SLOT	DARK GRAY	SPS/NYLON GF20
1x4 CONNECTOR HOUSING, KEYING OPTION B 7mm CLIP SLOT	STONE GRAY	SPS/NYLON GF20
1x4 CONNECTOR HOUSING, KEYING OPTION A 7mm CLIP SLOT	BLACK	SPS/NYLON GF20
1x4 CONNECTOR HOUSING, KEYING OPTION G 7mm CLIP SLOT	YELLOW	SPS/NYLON GF20
1x4 CONNECTOR HOUSING, KEYING OPTION F 7mm CLIP SLOT	YELLOW	SPS/NYLON GF20
1x4 CONNECTOR HOUSING, KEYING OPTION E 7mm CLIP SLOT	YELLOW	SPS/NYLON GF20
1x4 CONNECTOR HOUSING, KEYING OPTION D 7mm CLIP SLOT	YELLOW	SPS/NYLON GF20
1x4 CONNECTOR HOUSING, KEYING OPTION C 7mm CLIP SLOT	YELLOW	SPS/NYLON GF20
1x4 CONNECTOR HOUSING, KEYING OPTION B 7mm CLIP SLOT	YELLOW	SPS/NYLON GF20
1x4 CONNECTOR HOUSING, KEYING OPTION A 7mm CLIP SLOT	YELLOW	SPS/NYLON GF20

BOM/APPLICABLE COMPONENTS TABLE

LEGEND TABLE

ABREVIATION	COMPONENT
A	CONNECTOR HOUSING KEYING OPTION A
B	CONNECTOR HOUSING KEYING OPTION B
C	CONNECTOR HOUSING KEYING OPTION C
D	CONNECTOR HOUSING KEYING OPTION D
E	CONNECTOR HOUSING KEYING OPTION E
F	CONNECTOR HOUSING KEYING OPTION F
G	CONNECTOR HOUSING KEYING OPTION G
PLR	PLR

THIS DRAWING CONTAINS INFORMATION THAT IS PROPRIETARY TO MOLEX ELECTRONIC TECHNOLOGIES, LLC AND SHOULD NOT BE USED WITHOUT WRITTEN PERMISSION

DIMENSION UNITS	SCALE
mm	2:1

GENERAL TOLERANCES (UNLESS SPECIFIED)

ANGULAR TOL	±	3 °
4 PLACES	±	0
3 PLACES	±	0
2 PLACES	±	0.1
1 PLACE	±	0.2
0 PLACES	±	0.5

DRAFT WHERE APPLICABLE MUST REMAIN WITHIN DIMENSIONS

CURRENT REV DESC: MINOR BOM UPDATE - OBSOLETE PART NUMBER

EC NO:

DRWN:	Gajare Abhishek Murugesh	16-Jan-2023
CHK'D:	Graham Elliott	16-Jun-2023
APPR:	Katy Boruszewski	16-Jun-2023

INITIAL REVISION:

DRWN:	MVANSLAMBROU	2012/07/13
APPR:	VKOSHY	2012/07/24

molex

1.2MM 1X4, 1X6 BLADE SEALED ASSEMBLY CABLE SEAL 639764 - REMOVED CPA3 AND REPLACED WITH CPA2 AGAIN 64

PRODUCT SALES DRAWING

DOCUMENT NUMBER	DOC TYPE	DOC PART	REVISION
SD-34899-6001	PSD	001	C1

THIRD ANGLE PROJECTION	DRAWING	SERIES	MATERIAL NUMBER	CUSTOMER	SHEET NUMBER
	D-SIZE	34899	SEE TABLE	GENERAL MARKET	8 OF 11

DOCUMENT STATUS	Production	RELEASE DATE	16-Jun-2023 11:09:22

1x4 BLADE SEALED ASSEMBLY BOM FOR WIRE DRESS COVER INTERFACE 2 REFER WIRE DRESS INTERFACE SHEET FOR DETAILS

ASSEMBLY DESCRIPTION	ASSEMBLY PART NUMBER	A	B	C	D	E	F	G	A	B	C	D	E	F	G	PLR	PRODUCTION TOOL STATUS	COMMENTS
KEYING OPTION A, 40G CLIP SLOT, BLACK	34899-4060															A	TOOLED BUT NOT VALIDATED	
KEYING OPTION A, 40G CLIP SLOT, YELLOW	34899-4050														A		TOOLED BUT NOT VALIDATED	
KEYING OPTION G, 7mm CLIP SLOT, LIGHT GRAY	34899-4086													G			SALEABLE	
KEYING OPTION F, 7mm CLIP SLOT, BLACK	34899-4085												F				SALEABLE	
KEYING OPTION E, 7mm CLIP SLOT, DARK GRAY	34899-4084											E					SALEABLE	
KEYING OPTION D, 7mm CLIP SLOT, LIGHT GRAY	34899-4083										D						SALEABLE	
KEYING OPTION C, 7mm CLIP SLOT, DARK GRAY	34899-4082									C							SALEABLE	
KEYING OPTION B, 7mm CLIP SLOT, STONE GRAY	34899-4081								B								SALEABLE	
KEYING OPTION A, 7mm CLIP SLOT, BLACK	34899-4080							A									SALEABLE	
KEYING OPTION G, 7mm CLIP SLOT, YELLOW	34899-4076						G										SALEABLE	
KEYING OPTION F, 7mm CLIP SLOT, YELLOW	34899-4075					F											SALEABLE	
KEYING OPTION E, 7mm CLIP SLOT, YELLOW	34899-4074				E												SALEABLE	
KEYING OPTION D, 7mm CLIP SLOT, YELLOW	34899-4073			D													SALEABLE	
KEYING OPTION C, 7mm CLIP SLOT, YELLOW	34899-4072		C														SALEABLE	
KEYING OPTION B, 7mm CLIP SLOT, YELLOW	34899-4071	B															SALEABLE	
KEYING OPTION A, 7mm CLIP SLOT, YELLOW	34899-4070	A															SALEABLE	

DESCRIPTION	COLOR	MATERIAL
PLR	NATURAL	SPS/NYLON GF20
1x4 CONNECTOR HOUSING, KEYING OPTION A 40G CLIP SLOT	BLACK	SPS/NYLON GF20
1x4 CONNECTOR HOUSING, KEYING OPTION A 40G CLIP SLOT	YELLOW	SPS/NYLON GF20
1x4 CONNECTOR HOUSING, KEYING OPTION G 7mm CLIP SLOT	LIGHT GRAY	SPS/NYLON GF20
1x4 CONNECTOR HOUSING, KEYING OPTION F 7mm CLIP SLOT	BLACK	SPS/NYLON GF20
1x4 CONNECTOR HOUSING, KEYING OPTION E 7mm CLIP SLOT	DARK GRAY	SPS/NYLON GF20
1x4 CONNECTOR HOUSING, KEYING OPTION D 7mm CLIP SLOT	LIGHT GRAY	SPS/NYLON GF20
1x4 CONNECTOR HOUSING, KEYING OPTION C 7mm CLIP SLOT	DARK GRAY	SPS/NYLON GF20
1x4 CONNECTOR HOUSING, KEYING OPTION B 7mm CLIP SLOT	STONE GRAY	SPS/NYLON GF20
1x4 CONNECTOR HOUSING, KEYING OPTION A 7mm CLIP SLOT	BLACK	SPS/NYLON GF20
1x4 CONNECTOR HOUSING, KEYING OPTION G 7mm CLIP SLOT	YELLOW	SPS/NYLON GF20
1x4 CONNECTOR HOUSING, KEYING OPTION F 7mm CLIP SLOT	YELLOW	SPS/NYLON GF20
1x4 CONNECTOR HOUSING, KEYING OPTION E 7mm CLIP SLOT	YELLOW	SPS/NYLON GF20
1x4 CONNECTOR HOUSING, KEYING OPTION D 7mm CLIP SLOT	YELLOW	SPS/NYLON GF20
1x4 CONNECTOR HOUSING, KEYING OPTION C 7mm CLIP SLOT	YELLOW	SPS/NYLON GF20
1x4 CONNECTOR HOUSING, KEYING OPTION B 7mm CLIP SLOT	YELLOW	SPS/NYLON GF20
1x4 CONNECTOR HOUSING, KEYING OPTION A 7mm CLIP SLOT	YELLOW	SPS/NYLON GF20

BOM/APPLICABLE COMPONENTS TABLE

LEGEND TABLE

ABREVIATION	COMPONENT
A	CONNECTOR HOUSING KEYING OPTION A
B	CONNECTOR HOUSING KEYING OPTION B
C	CONNECTOR HOUSING KEYING OPTION C
D	CONNECTOR HOUSING KEYING OPTION D
E	CONNECTOR HOUSING KEYING OPTION E
F	CONNECTOR HOUSING KEYING OPTION F
G	CONNECTOR HOUSING KEYING OPTION G
PLR	PLR

THIS DRAWING CONTAINS INFORMATION THAT IS PROPRIETARY TO MOLEX ELECTRONIC TECHNOLOGIES, LLC AND SHOULD NOT BE USED WITHOUT WRITTEN PERMISSION

DIMENSION UNITS	SCALE
mm	1:1

GENERAL TOLERANCES (UNLESS SPECIFIED)

ANGULAR TOL	±	3 °
4 PLACES	±	0
3 PLACES	±	0
2 PLACES	±	0.1
1 PLACE	±	0.2
0 PLACES	±	0.5

DRAFT WHERE APPLICABLE MUST REMAIN WITHIN DIMENSIONS

CURRENT REV DESC: MINOR BOM UPDATE - OBSOLETE PART NUMBER

EC NO:

DRWN:	Gajare Abhishek Murugesh	16-Jan-2023
CHK'D:	Graham Elliott	16-Jun-2023
APPR:	Katy Boruszewski	16-Jun-2023

INITIAL REVISION:

DRWN:	MVANSLAMBROU	2012/07/13
APPR:	VKOSHY	2012/07/24

molex

1.2MM 1X4, 1X6 BLADE SEALED ASSEMBLY CABLE SEAL 639764 - REMOVED CPA3 AND REPLACED WITH CPA2 AGAIN 64

PRODUCT SALES DRAWING

DOCUMENT NUMBER	DOC TYPE	DOC PART	REVISION
SD-34899-6001	PSD	001	C1

THIRD ANGLE PROJECTION	DRAWING	SERIES	MATERIAL NUMBER	CUSTOMER	SHEET NUMBER
	D-SIZE	34899	SEE TABLE	GENERAL MARKET	9 OF 11

DOCUMENT STATUS	Production	RELEASE DATE	16-Jun-2023 11:09:22

TEMPLATE: master-dual-sheet-D
REVISION: J
DATE: 2020/01/10

1x6 BLADE SEALED ASSEMBLY BOM FOR WIRE DRESS COVER INTERFACE 1 REFER WIRE DRESS INTERFACE SHEET FOR DETAILS

ASSEMBLY DESCRIPTION	ASSEMBLY PART NUMBER																		PRODUCTION TOOL STATUS	COMMENTS
KEYING OPTION A, 40-G CLIP SLOT, BLACK	34899-6070																	A	CONCEPT	
KEYING OPTION A, 40-G CLIP SLOT, YELLOW	34899-6050																A		CONCEPT	
KEYING OPTION D, 11mm CLIP SLOT, STONE GRAY	34899-6063															D			OBSOLETE	
KEYING OPTION C, 11mm CLIP SLOT, DARK GRAY	34899-6062														C				OBSOLETE	
KEYING OPTION B, 11mm CLIP SLOT, LIGHT GRAY	34899-6061													B					OBSOLETE	
KEYING OPTION A, 11mm CLIP SLOT, BLACK	34899-6060												A						OBSOLETE	
KEYING OPTION D, 11mm CLIP SLOT, YELLOW	34899-6043											D							OBSOLETE	
KEYING OPTION C, 11mm CLIP SLOT, YELLOW	34899-6042										C								OBSOLETE	
KEYING OPTION B, 11mm CLIP SLOT, YELLOW	34899-6041									B									OBSOLETE	
KEYING OPTION A, 11mm CLIP SLOT, YELLOW	34899-6040								A										SALEABLE	
KEYING OPTION D, 7mm CLIP SLOT, STONE GRAY	34899-6023							D											OBSOLETE	
KEYING OPTION C, 7mm CLIP SLOT, DARK GRAY	34899-6022						C												OBSOLETE	
KEYING OPTION B, 7mm CLIP SLOT, LIGHT GRAY	34899-6021					B													OBSOLETE	
KEYING OPTION A, 7mm CLIP SLOT, BLACK	34899-6020				A														OBSOLETE	
KEYING OPTION D, 7mm CLIP SLOT, YELLOW	34899-6013			D															OBSOLETE	
KEYING OPTION C, 7mm CLIP SLOT, YELLOW	34899-6012		C																OBSOLETE	
KEYING OPTION B, 7mm CLIP SLOT, YELLOW	34899-6011	B																	OBSOLETE	
KEYING OPTION A, 7mm CLIP SLOT, YELLOW	34899-6010	A																	OBSOLETE	

DESCRIPTION	COLOR	MATERIAL
PLR	NATURAL	SPS/NYLON GF20
1x6 CONNECTOR HOUSING, KEYING OPTION A 40G CLIP SLOT	BLACK	SPS/NYLON GF20
1x6 CONNECTOR HOUSING, KEYING OPTION A 40G CLIP SLOT	YELLOW	SPS/NYLON GF20
1x6 CONNECTOR HOUSING, KEYING OPTION D 11mm CLIP SLOT	STONE GRAY	SPS/NYLON GF20
1x6 CONNECTOR HOUSING, KEYING OPTION C 11mm CLIP SLOT	DARK GRAY	SPS/NYLON GF20
1x6 CONNECTOR HOUSING, KEYING OPTION B 11mm CLIP SLOT	LIGHT GRAY	SPS/NYLON GF20
1x6 CONNECTOR HOUSING, KEYING OPTION A 11mm CLIP SLOT	BLACK	SPS/NYLON GF20
1x6 CONNECTOR HOUSING, KEYING OPTION D 11mm CLIP SLOT	YELLOW	SPS/NYLON GF20
1x6 CONNECTOR HOUSING, KEYING OPTION C 11mm CLIP SLOT	YELLOW	SPS/NYLON GF20
1x6 CONNECTOR HOUSING, KEYING OPTION B 11mm CLIP SLOT	YELLOW	SPS/NYLON GF20
1x6 CONNECTOR HOUSING, KEYING OPTION A 11mm CLIP SLOT	YELLOW	SPS/NYLON GF20
1x6 CONNECTOR HOUSING, KEYING OPTION D 7mm CLIP SLOT	STONE GRAY	SPS/NYLON GF20
1x6 CONNECTOR HOUSING, KEYING OPTION C 7mm CLIP SLOT	DARK GRAY	SPS/NYLON GF20
1x6 CONNECTOR HOUSING, KEYING OPTION B 7mm CLIP SLOT	LIGHT GRAY	SPS/NYLON GF20
1x6 CONNECTOR HOUSING, KEYING OPTION A 7mm CLIP SLOT	BLACK	SPS/NYLON GF20
1x6 CONNECTOR HOUSING, KEYING OPTION D 7mm CLIP SLOT	YELLOW	SPS/NYLON GF20
1x6 CONNECTOR HOUSING, KEYING OPTION C 7mm CLIP SLOT	YELLOW	SPS/NYLON GF20
1x6 CONNECTOR HOUSING, KEYING OPTION B 7mm CLIP SLOT	YELLOW	SPS/NYLON GF20
1x6 CONNECTOR HOUSING, KEYING OPTION A 7mm CLIP SLOT	YELLOW	SPS/NYLON GF20

BOM/APPLICABLE COMPONENTS TABLE

LEGEND TABLE	
ABREVIATION	COMPONENT
A	CONNECTOR HOUSING KEYING OPTION A
B	CONNECTOR HOUSING KEYING OPTION B
C	CONNECTOR HOUSING KEYING OPTION C
D	CONNECTOR HOUSING KEYING OPTION D
PLR	PLR

THIS DRAWING CONTAINS INFORMATION THAT IS PROPRIETARY TO MOLEX ELECTRONIC TECHNOLOGIES, LLC AND SHOULD NOT BE USED WITHOUT WRITTEN PERMISSION

DIMENSION UNITS	SCALE
mm	2:1

GENERAL TOLERANCES (UNLESS SPECIFIED)

ANGULAR TOL	±	3 °
4 PLACES	±	0
3 PLACES	±	0
2 PLACES	±	0.1
1 PLACE	±	0.2
0 PLACES	±	0.5

DRAFT WHERE APPLICABLE MUST REMAIN WITHIN DIMENSIONS

CURRENT REV DESC: MINOR BOM UPDATE - OBSOLETE PART NUMBER

EC NO:
DRWN: Gajare Abhishek Murugesh 16-Jan-2023
CHK'D: Graham Elliott 16-Jun-2023
APPR: Katy Boruszewski 16-Jun-2023

INITIAL REVISION:
DRWN: MVANSLAMBROU 2012/07/13
APPR: VKOSHY 2012/07/24

molex

1.2MM 1X4, 1X6 BLADE SEALED ASSEMBLY CABLE SEAL 639764 - REMOVED CPA3 AND REPLACED WITH CPA2 AGAIN 64

PRODUCT SALES DRAWING

DOCUMENT NUMBER	DOC TYPE	DOC PART	REVISION
SD-34899-6001	PSD	001	C1

THIRD ANGLE PROJECTION	DRAWING	SERIES	MATERIAL NUMBER	CUSTOMER	SHEET NUMBER
	D-SIZE	34899	SEE TABLE	GENERAL MARKET	10 OF 11

DOCUMENT STATUS	Production	RELEASE DATE	16-Jun-2023 11:09:22

TEMPLATE: master-dual-sheet-D
REVISION: J
DATE: 2006/01/10

1x6 BLADE SEALED ASSEMBLY BOM FOR WIRE DRESS COVER INTERFACE 2 REFER WIRE DRESS INTERFACE SHEET FOR DETAILS

ASSEMBLY DESCRIPTION	ASSEMBLY PART NUMBER	A	B	C	D	PLR	PRODUCTION TOOL STATUS	COMMENTS
KEYING OPTION D, 11mm CLIP SLOT, STONE GRAY	34899-6123				D		SALEABLE	
KEYING OPTION C, 11mm CLIP SLOT, DARK GRAY	34899-6122			C			SALEABLE	
KEYING OPTION B, 11mm CLIP SLOT, LIGHT GRAY	34899-6121		B				SALEABLE	
KEYING OPTION A, 11mm CLIP SLOT, BLACK	34899-6120	A					SALEABLE	
KEYING OPTION D, 11mm CLIP SLOT, YELLOW	34899-6113				D		SALEABLE	
KEYING OPTION C, 11mm CLIP SLOT, YELLOW	34899-6112			C			SALEABLE	
KEYING OPTION B, 11mm CLIP SLOT, YELLOW	34899-6111		B				SALEABLE	
KEYING OPTION A, 11mm CLIP SLOT, YELLOW	34899-6110	A					SALEABLE	
KEYING OPTION D, 7mm CLIP SLOT, STONE GRAY	34899-6093				D		SALEABLE	
KEYING OPTION C, 7mm CLIP SLOT, DARK GRAY	34899-6092			C			SALEABLE	
KEYING OPTION B, 7mm CLIP SLOT, LIGHT GRAY	34899-6091		B				SALEABLE	
KEYING OPTION A, 7mm CLIP SLOT, BLACK	34899-6090	A					SALEABLE	
KEYING OPTION D, 7mm CLIP SLOT, YELLOW	34899-6083				D		SALEABLE	
KEYING OPTION C, 7mm CLIP SLOT, YELLOW	34899-6082			C			SALEABLE	
KEYING OPTION B, 7mm CLIP SLOT, YELLOW	34899-6081		B				SALEABLE	
KEYING OPTION A, 7mm CLIP SLOT, YELLOW	34899-6080	A					SALEABLE	

DESCRIPTION	COLOR	MATERIAL
PLR	NATURAL	SPS/NYLON GF20
1x6 CONNECTOR HOUSING, KEYING OPTION D 11mm CLIP SLOT	STONE GRAY	SPS/NYLON GF20
1x6 CONNECTOR HOUSING, KEYING OPTION C 11mm CLIP SLOT	DARK GRAY	SPS/NYLON GF20
1x6 CONNECTOR HOUSING, KEYING OPTION B 11mm CLIP SLOT	LIGHT GRAY	SPS/NYLON GF20
1x6 CONNECTOR HOUSING, KEYING OPTION A 11mm CLIP SLOT	BLACK	SPS/NYLON GF20
1x6 CONNECTOR HOUSING, KEYING OPTION D 11mm CLIP SLOT	YELLOW	SPS/NYLON GF20
1x6 CONNECTOR HOUSING, KEYING OPTION C 11mm CLIP SLOT	YELLOW	SPS/NYLON GF20
1x6 CONNECTOR HOUSING, KEYING OPTION B 11mm CLIP SLOT	YELLOW	SPS/NYLON GF20
1x6 CONNECTOR HOUSING, KEYING OPTION A 11mm CLIP SLOT	YELLOW	SPS/NYLON GF20
1x6 CONNECTOR HOUSING, KEYING OPTION D 7mm CLIP SLOT	STONE GRAY	SPS/NYLON GF20
1x6 CONNECTOR HOUSING, KEYING OPTION C 7mm CLIP SLOT	DARK GRAY	SPS/NYLON GF20
1x6 CONNECTOR HOUSING, KEYING OPTION B 7mm CLIP SLOT	LIGHT GRAY	SPS/NYLON GF20
1x6 CONNECTOR HOUSING, KEYING OPTION A 7mm CLIP SLOT	BLACK	SPS/NYLON GF20
1x6 CONNECTOR HOUSING, KEYING OPTION D 7mm CLIP SLOT	YELLOW	SPS/NYLON GF20
1x6 CONNECTOR HOUSING, KEYING OPTION C 7mm CLIP SLOT	YELLOW	SPS/NYLON GF20
1x6 CONNECTOR HOUSING, KEYING OPTION B 7mm CLIP SLOT	YELLOW	SPS/NYLON GF20
1x6 CONNECTOR HOUSING, KEYING OPTION A 7mm CLIP SLOT	YELLOW	SPS/NYLON GF20

BOM/APPLICABLE COMPONENTS TABLE

LEGEND TABLE	
ABREVIATION	COMPONENT
A	CONNECTOR HOUSING KEYING OPTION A
B	CONNECTOR HOUSING KEYING OPTION B
C	CONNECTOR HOUSING KEYING OPTION C
D	CONNECTOR HOUSING KEYING OPTION D
PLR	PLR

THIS DRAWING CONTAINS INFORMATION THAT IS PROPRIETARY TO MOLEX ELECTRONIC TECHNOLOGIES, LLC AND SHOULD NOT BE USED WITHOUT WRITTEN PERMISSION

DIMENSION UNITS	SCALE
mm	1:1

GENERAL TOLERANCES (UNLESS SPECIFIED)

ANGULAR TOL	±	3 °
4 PLACES	±	0
3 PLACES	±	0
2 PLACES	±	0.1
1 PLACE	±	0.2
0 PLACES	±	0.5

DRAFT WHERE APPLICABLE MUST REMAIN WITHIN DIMENSIONS

CURRENT REV DESC: MINOR BOM UPDATE - OBSOLETE PART NUMBER

EC NO:

DRWN: Gajare Abhishek Murugesh 16-Jan-2023
CHK'D: Graham Elliott 16-Jun-2023
APPR: Katy Boruszewski 16-Jun-2023

INITIAL REVISION:
DRWN: MVANSLAMBROU 2012/07/13
APPR: VKOSHY 2012/07/24

molex

1.2MM 1X4, 1X6 BLADE SEALED ASSEMBLY CABLE SEAL 639764 - REMOVED CPA3 AND REPLACED WITH CPA2 AGAIN 64

PRODUCT SALES DRAWING

DOCUMENT NUMBER	DOC TYPE	DOC PART	REVISION
SD-34899-6001	PSD	001	C1

THIRD ANGLE PROJECTION	DRAWING	SERIES	MATERIAL NUMBER	CUSTOMER	SHEET NUMBER
	D-SIZE	34899	SEE TABLE	GENERAL MARKET	11 OF 11

DOCUMENT STATUS	Production	RELEASE DATE	16-Jun-2023 11:09:22

TEMPLATE: master-dbpmdx07
REVISION: 2
DATE: 2020/01/14