Jun.1.2024 Copyright 2024 HIROSE ELECTRIC CO., LTD. All Rights Reserved.
In case of consideration for using Automotive equipment / device which demand high reliability, kindly contact our sales window correspondents.

	COUNT	DESCRIPTION OF REVISIONS	BY	CHKD	DATE		COUNT	DESCRIPTION OF REVISIONS	BY	CHKD	DATE
△					. .	△					. .
△					. .	△					. .
△					. .	△					. .

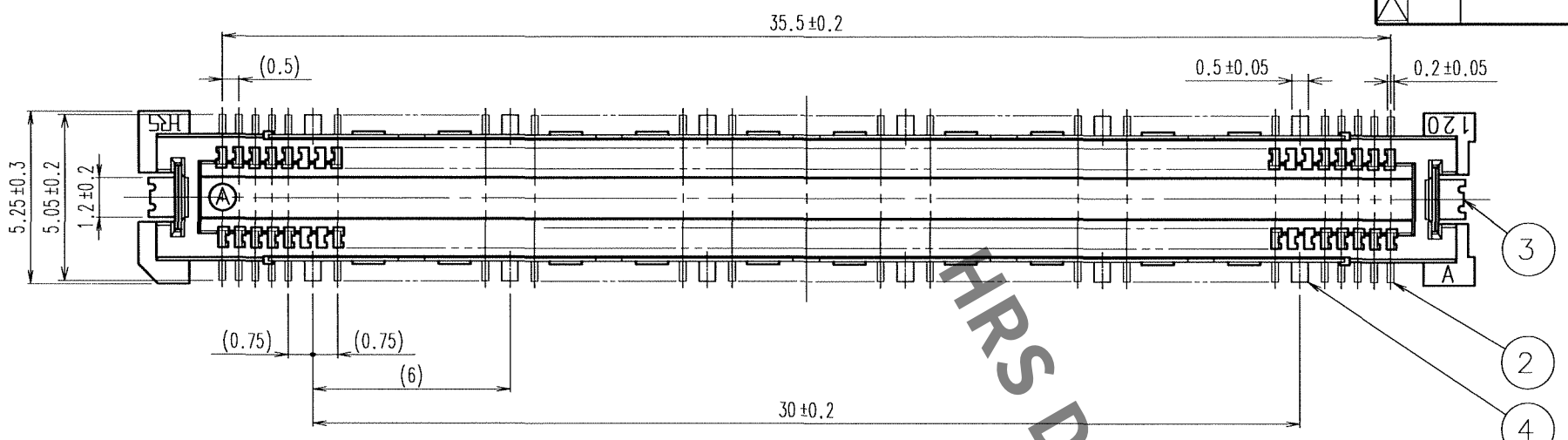

RECOMMENDED LAND PATTERN DIMENSION OF PCB

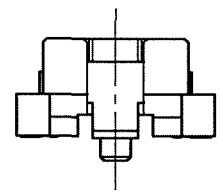

SIGNAL PORTION CROSS SECTION (10:1)

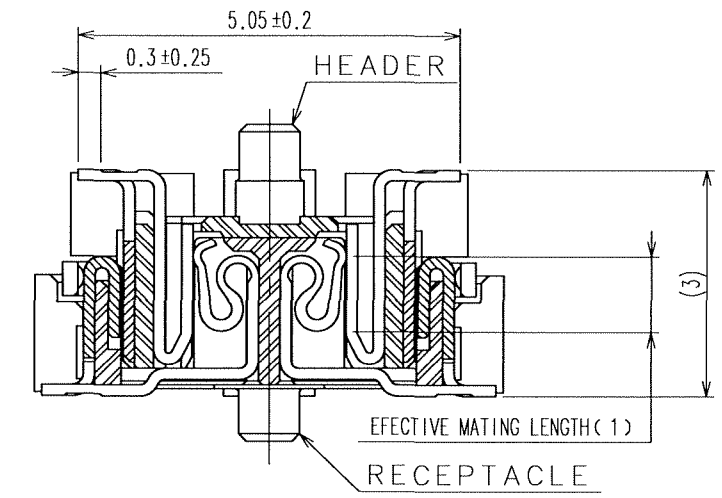

GROUND PORTION CROSS SECTION (10:1)

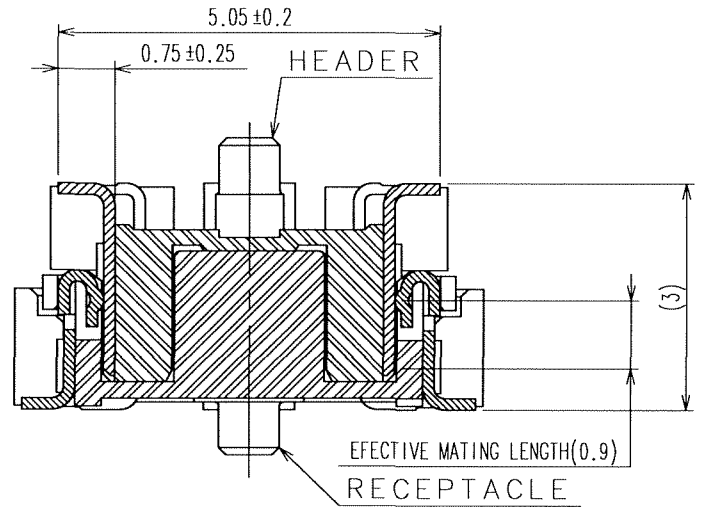

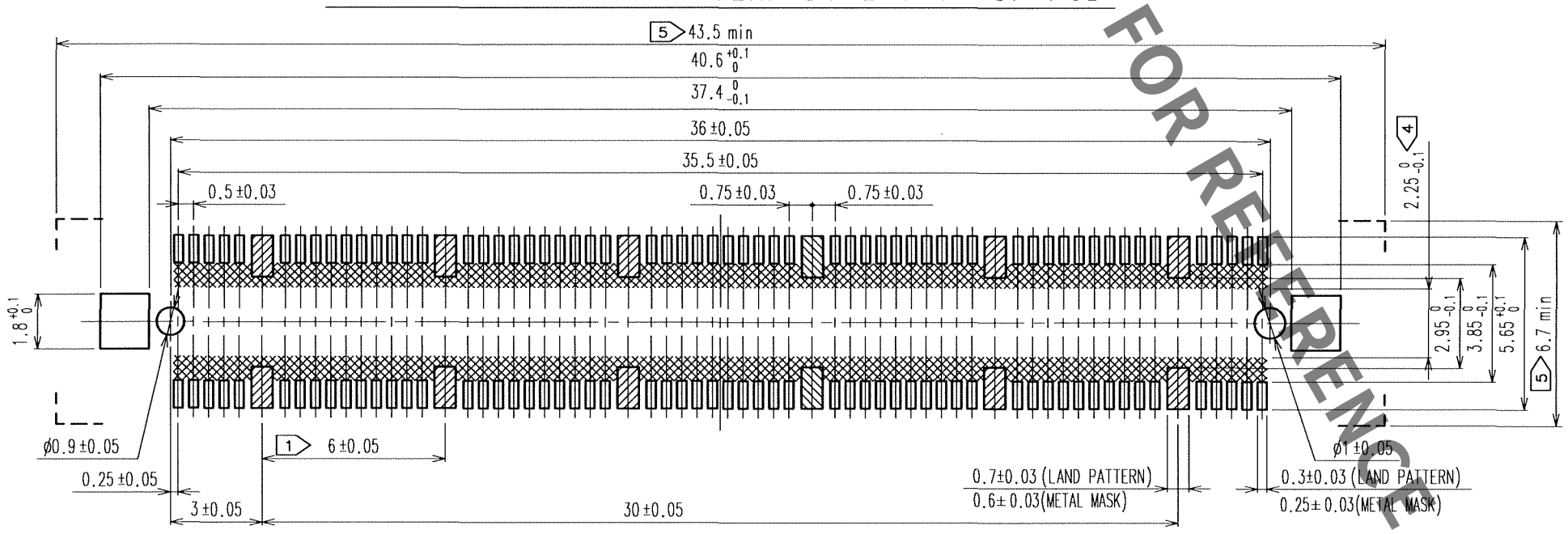

HRS DRAWING FOR REFERENCE

NO.	MATERIAL	FINISH, REMARKS	NO.	MATERIAL	FINISH, REMARKS
3, 4	PHOSPHOR BRONZE	TIN-PLATING	2	COPPER ALLOY	CONTACT AREA:GOLD 0.1 μm min.
1	LCP	BEIGE UL94V-0			LEAD AREA:GOLD FLASH
					UNDER PLATING:NICKEL 1 μm min.

NOTES
1. 12 HATCHED ▨ PARTS:GROUND CIRUIT.
2. SMT LEAD-COPLANARITY:0.1 MAX.
3. THIS PRODUCT HAS NO POLARITY TO PATTERN FOR MOUNTING.
4. MAKE SURE WIDTH OF PATTERN IS WITHIN THAT OF LAND ,OR LEAD MAY TOUCH PATTERN.(THIS APPLIES TO HATCHED ▩ AREA.)
5. DO NOT MOUNT OTHER DEVICES ONTO [ ] AREA ,OR MATING PAIR CANNOT BE MATED.
6. THE DIMENSIONS IN PARENTHESES ARE FOR REFERENCE.

CODE NO.(OLD)	DRAWN	DESIGNED	CHECKED	APPROVED	RELEASED
CL	K.NAKAMURA 06.02.20	K.NAKAMURA 06.02.20	H.Ogawa '06.02.20	H.Okawa 06.02.20	

SCALE 5 : 1
UNITS mm

DRAWING NO. EDC3-152617-25

HRS HIROSE ELECTRIC CO.,LTD.

PART NO. FX11A-120P/12-SV0.5(71)

CODE NO. CL573-0605-2-71

1/1

TO
PCK

FORM NO.229