3 POLE
M12 MALE

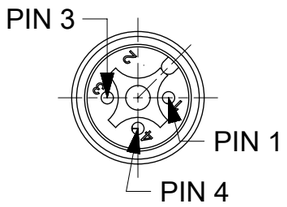

PIN	WIRE COLOR
1	BN
2	-
3	BU
4	BK
5	-

4 POLE
M12 MALE

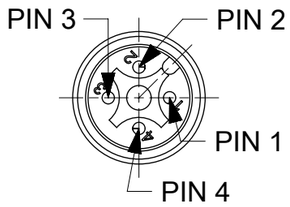

PIN	WIRE COLOR
1	BN
2	WH
3	BU
4	BK
5	-

5 POLE
M12 MALE

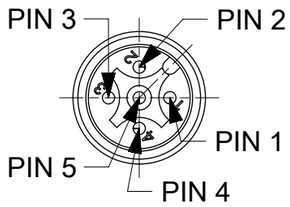

PIN	WIRE COLOR
1	BN
2	WH
3	BU
4	BK
5	GY

CODING ACCORDING TO IEC 61076-2-101

PART No MATRIX

Y	0	X	0	0	6	X	X	X	X	X	X	X	X	X

OPTIONS

Y0= ULTRA LOCK 2.0
SINGLE ENDED

POLES:
3 = 3 POLES
4 = 4 POLES
5 = 5 POLES

HEADER:
006= MALE STR

CABLE:
E03 - 3/4/5x0.34 PVC BLACK
B30 - 3/4/5x0.34 WSOR BLACK
H09 - 3/4/5x0.34 PUR-LS0H BLACK

UNIT:
M = METER
F = FEET
C = CENTIMETER
T = 10M

LENGTH:
EXAMPLE:
010 = 1 m
050 = 5 m
100 = 10 m

OVERMOLD:
BLANK = STANDARD BRAD:
-YELLOW IN THE USA
-BLACK IN EUROPE
A = GREY
E = RED
G = BLACK
Y = YELLOW
H = STD. COLOUR WITH TWO
ID-TAG CARRIERS

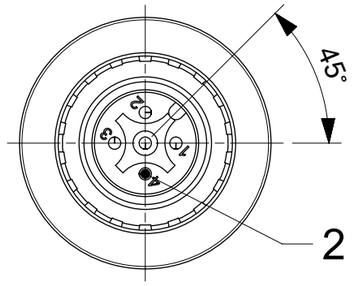

5 POLE SHOWN

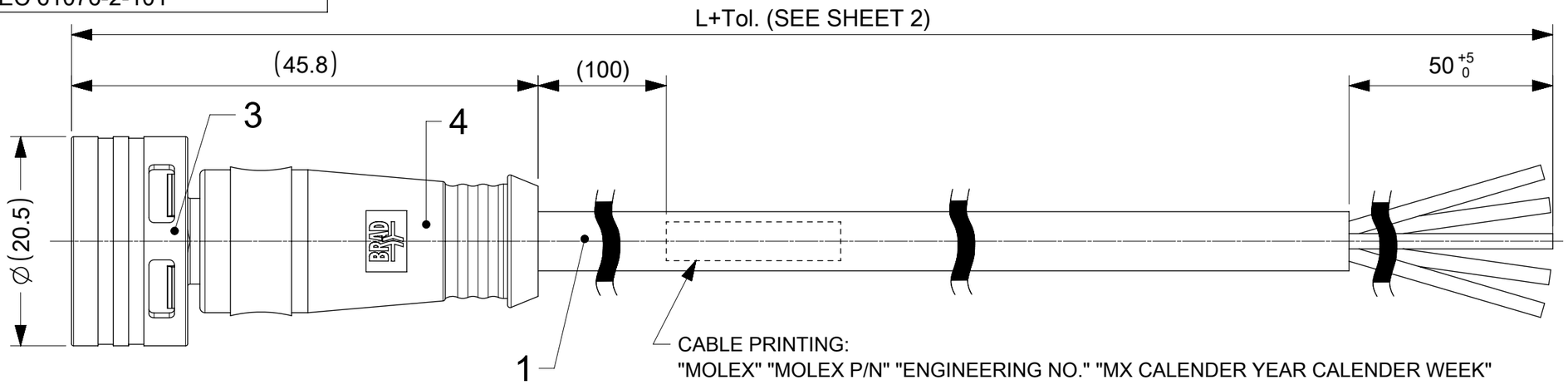

CABLE PRINTING:
"MOLEX" "MOLEX P/N" "ENGINEERING NO." "MX CALENDER YEAR CALENDER WEEK"
SECOND PRINT 300mm. AWAY

FOR EXAMPLE: MOLEX 1204000061 Y05006E03M010 MX2038

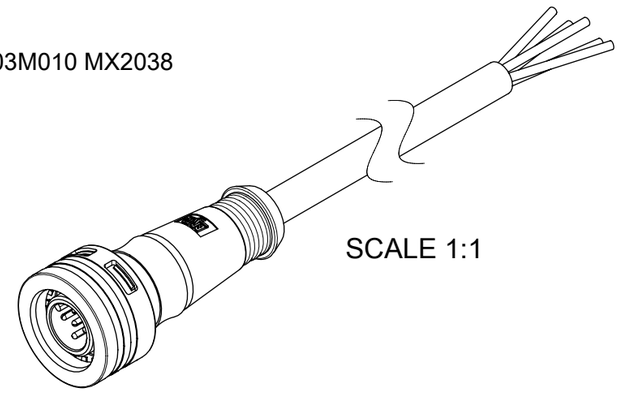

SCALE 1:1

NOTES:

1. PARTS ACC. TO PRODUCT SPECIFICATION 1204000001 PS P10 AND IN STYLE OF IEC-61076-2-010
2. BOM & PART LIST - SEE SHEET 2
3. RATED VOLTAGE :
   3, 4 CONTACTS: 250V AC OR DC
   5 CONTACTS: 60V AC OR DC
   RATED CURRENT:
   3, 4, 5 CONTACTS: 4A, DERATING HAS TO BE CONSIDERED
   OVERVOLTAGE CATEGORY: 3
   POLLUTION DEGREE: 3, ONLY IN MATED AND LOCKED CONDITION
4. PROTECTION CLASS: IP 67, ONLY IN MATED AND LOCKED CONDITION
5. TEMPERATURE RANGE:
   TEMPERATURE PLUG/SOCKET: -40 °C TO +85 °C
   TEMPERATURE CABLE: SEE CABLE LIST
6. MECHANICAL OPERATIONS: 100 CYCLES
7. MATES WITH ULTRA-LOCK M12 FEMALE RECEPTACLES
8. PACKAGING: THE CORDSETS ARE SINGLE PACKED IN PLASTIC BAGS AND DELIVERED IN CARTON BOXES
9. UL CSA FILE REGISTRATION PENDING

DOCUMENT STATUS	P1	RELEASE DATE	2023/01/31 08:21:29

THIS DRAWING CONTAINS INFORMATION THAT IS PROPRIETARY TO MOLEX ELECTRONIC TECHNOLOGIES, LLC AND SHOULD NOT BE USED WITHOUT WRITTEN PERMISSION

FUNCTIONAL SYMBOLS: FA = 0, FC = 0, FP = 0
DIVISIONAL SYMBOLS

DIMENSION UNITS	SCALE
mm	2:1

GENERAL TOLERANCES (UNLESS SPECIFIED)

ANGULAR TOL	±	1.0 °
4 PLACES	±	
3 PLACES	±	
2 PLACES	±	0.05
1 PLACE	±	0.3
0 PLACES	±	0.5

DRAFT WHERE APPLICABLE MUST REMAIN WITHIN DIMENSIONS

CURRENT REV DESC: NOTES AND CABLE LIST UPDATED

EC NO: 736602
DRWN: RSCHIEBER 2023/01/24
CHK'D: RSILLER 2023/01/31
APPR: RSILLER 2023/01/31

INITIAL REVISION:
DRWN: JELIZAINCIN 2021/01/12
APPR: RSILLER 2022/10/14

THIRD ANGLE PROJECTION | DRAWING: A3-SIZE | SERIES: 120400

molex

CSE U12 3-5P AC MA STR XM SE UNSH BK

PRODUCT CUSTOMER DRAWING

DOCUMENT NUMBER	DOC TYPE	DOC PART	REVISION
1204000061	PSD	000	A1

MATERIAL NUMBER	CUSTOMER	SHEET NUMBER
SEE SHEET 2	GENERAL MARKET	1 OF 2

FORMAT: master_tb-ps-A3
REVISION: J1
DATE: 2020/01/14

PART LIST

MOLEX NO.	ENGINEERING NO.	LENGHT (MM)
1204000037	Y03006E03M010	1000
1204000038	Y03006E03M020	2000
1204000039	Y03006E03M050	5000
1204000040	Y03006E03M100	10000
1204000041	Y03006B30M010	1000
1204000042	Y03006B30M020	2000
1204000043	Y03006B30M050	5000
1204000044	Y03006B30M100	10000
1204000045	Y03006H09M010	1000
1204000046	Y03006H09M020	2000
1204000047	Y03006H09M050	5000
1204000048	Y03006H09M100	10000
1204000049	Y04006E03M010	1000
1204000050	Y04006E03M020	2000
1204000051	Y04006E03M050	5000
1204000052	Y04006E03M100	10000
1204000053	Y04006B30M010	1000
1204000054	Y04006B30M020	2000
1204000055	Y04006B30M050	5000
1204000056	Y04006B30M100	10000
1204000057	Y04006H09M010	1000
1204000058	Y04006H09M020	2000
1204000059	Y04006H09M050	5000

MOLEX NO.	ENGINEERING NO.	LENGHT (MM)
1204000060	Y04006H09M100	10000
1204000061	Y05006E03M010	1000
1204000062	Y05006E03M020	2000
1204000063	Y05006E03M050	5000
1204000064	Y05006E03M100	10000
1204000065	Y05006B30M010	1000
1204000066	Y05006B30M020	2000
1204000067	Y05006B30M050	5000
1204000068	Y05006B30M100	10000
1204000069	Y05006H09M010	1000
1204000070	Y05006H09M020	2000
1204000071	Y05006H09M050	5000
1204000072	Y05006H09M100	10000

MOLEX NO.	ENGINEERING NO.	LENGHT (MM)

CABLE LIST

3P	4P	5P	CABLE TYPE	DESCRIPTION	MATERIAL	FINISH/COLOR	FIXED INSTALLATION *		FLEXIBLE INSTALLATION **		DRAG CHAIN	
							MIN.	MAX.	MIN.	MAX.	MIN.	MAX.
X			E03	CABLE PVC, BLK 3X0.34MM D4.9	PVC	BLACK	-30°C	+80°C	-10°C	+80°C	NOT SUITABLE	
	X			CABLE PVC, BLK 4X0.34MM D5.4								
		X		CABLE PVC, BLK 5X0.34MM(UL/CSA) D5.8								
X			B30	CABLE 3X0.34 TPU BK D4.80 TPE UNSH DCS	PUR WSOR	BLACK	-40°C	+90°C	-25°C	+80°C	-5°C	+60°C
	X			CABLE 4X0.34 TPU BK D5.10 TPE UNSH DCS								
		X		CABLE 5X0.34 TPU BK D5.50 TPE UNSH DCS								
X			H09	CABLE PUR;BLK 3X0.34MM-LSOH;UL D4.4	PUR-LS0H	BLACK	-40°C	+80°C	-25°C	+80°C	+5°C	+60°C
	X			CABLE PUR;BLK 4X0.34MM-LSOH;UL D4.7								
		X		CABLE PUR BLK 5X0.34MM LSZH UL D5.0								

* FIXED POSITION WITHOUT ACCIDENTAL CRUSHING OF VIBRATION.
** FREE MOTION WITHOUT PERIODIC RECURRENCE OR FORCED GUIDANCE.

CABLE LENGTH TOLERANCES	
LENGTH	TOLERANCE
0m-1m	+40 mm
>1m-5m	+60 mm
>5m-10m	+80 mm
>10m-20m	+140 mm
>20m-30m	+160 mm
>30m	+1% length

BILL OF MATERIAL:

3P	4P	5P	ITEM	QTY	DESCRIPTION	MATERIAL	FINISH/COLOR
X	X	X	1	-	CABLE	SEE CABLE LIST	SEE CABLE LIST
X	X	X	2	3/4/5	CONTACT 10 MA STA AU	COPPER ALLOY	GOLD OVER NICKEL PLATED
X			3	1	PLG U12 3P AC MA PA UNSH WT	-	-
	X				PLG U12 4P AC MA PA UNSH WT		
		X			PLG U12 5P AC MA PA UNSH WT		
X	X	X	4	1	OVERMOLD	TPC	SEE MATRIX
IF "H" IS IN MATRIX-END			-	2	I/D CARRIER DIA 4-7MMX30MM	PVC	TRANSPARENT

DOCUMENT STATUS	P1	RELEASE DATE	2023/01/31 08:21:29

FUNCTIONAL SYMBOLS: FA = 0, FC = 0, FP = 0
DIVISIONAL SYMBOLS

THIS DRAWING CONTAINS INFORMATION THAT IS PROPRIETARY TO MOLEX ELECTRONIC TECHNOLOGIES, LLC AND SHOULD NOT BE USED WITHOUT WRITTEN PERMISSION

DIMENSION UNITS	SCALE
mm	1:1

GENERAL TOLERANCES (UNLESS SPECIFIED)

ANGULAR TOL	±	1.0 °
4 PLACES	±	
3 PLACES	±	
2 PLACES	±	0.05
1 PLACE	±	0.3
0 PLACES	±	0.5

DRAFT WHERE APPLICABLE MUST REMAIN WITHIN DIMENSIONS

CURRENT REV DESC: NOTES AND CABLE LIST UPDATED

EC NO: 736602
DRWN: RSCHIEBER 2023/01/24
CHK'D: RSILLER 2023/01/31
APPR: RSILLER 2023/01/31

INITIAL REVISION:
DRWN: JELIZAINCIN 2021/01/12
APPR: RSILLER 2022/10/14

THIRD ANGLE PROJECTION | DRAWING: A3-SIZE | SERIES: 120400

molex

CSE U12 3-5P AC MA STR XM SE UNSH BK

PRODUCT CUSTOMER DRAWING

DOCUMENT NUMBER	DOC TYPE	DOC PART	REVISION
1204000061	PSD	000	A1

MATERIAL NUMBER	CUSTOMER	SHEET NUMBER
SEE PART LIST	GENERAL MARKET	2 OF 2

FORMAT: master-shared-A3
REVISION: J
DATE: 2020/01/16