CKT SIZE	DIM "A"	DIM "B"
4	.709 [18.00]	.496 [12.60]
5	.874 [22.20]	.661 [16.80]
6	1.039 [26.40]	.827 [21.00]
7	1.205 [30.60]	.992 [25.20]
8	1.370 [34.80]	1.157 [29.40]
9	1.535 [39.00]	1.323 [33.60]
10	1.701 [43.20]	1.488 [37.80]
11	1.866 [47.40]	1.654 [42.00]
12	2.031 [51.60]	1.819 [46.20]

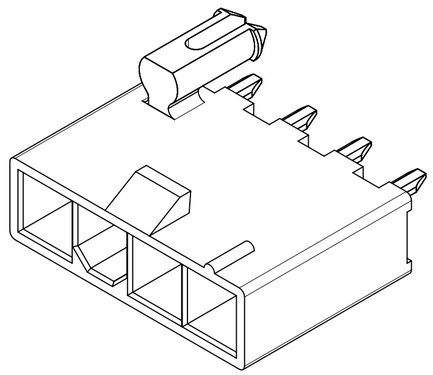

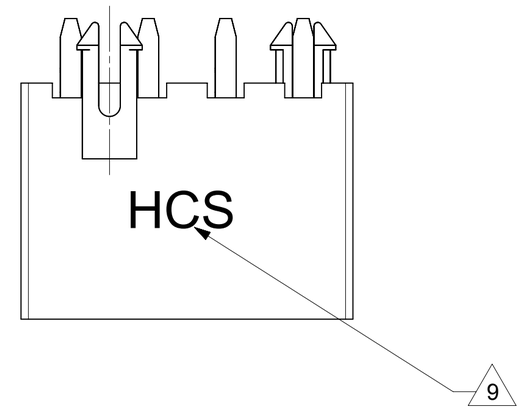

NOTES:
1. MATERIALS:
   HOUSING:
   "1"=NYLON 6/6, UL94 V-2, COLOR: NATURAL
   "2"=NYLON 6/6, UL94 V-0, COLOR: NATURAL
   "3"=NYLON 6/6, UL94 V-2, COLOR: BLACK
   TERMINALS:
   COPPER ALLOY
2. TERMINAL PLATING:
   "1"=.000100/(0.00254) MIN. MATTE TIN OVER .000050/(0.00127) MIN. NICKEL
   "2"=.000030/(0.00076) MIN. SELECT GOLD AND .000100/(0.00254) MIN. SELECT MATTE TIN OVER .000050/(0.00127) MIN. NICKEL OVERALL
3. PRODUCT SPECIFICATION: PS-44476-001
4. PACKAGING: SEE CHARTS
5. PART MATES WITH MINI-FIT JR. RECEPTACLE NO. 5557.
6. PART IS NOT DESIGNED FOR CURRENT SHARING.
7. PARTS ARE NOT TO BE MATED OR UN-MATED WHILE CIRCUITS ARE LIVE.
8. 44472-2470 ONLY FOR WIDER LOCKING RAMP.
9. PARTS WILL HAVE "HCS" MARKING.
10. SEE CHART FOR PARTS WITH PEGS REMOVED.
11. PART CONFORMS TO CLASS "B" REQUIREMENTS OF COSMETIC SPECIFICATION PS-45499-002.
12. 5 CIRCUIT PARTS HAVE PEG DESIGN B. ALL OTHER CIRCUIT SIZES HAVE PEG DESIGN A.

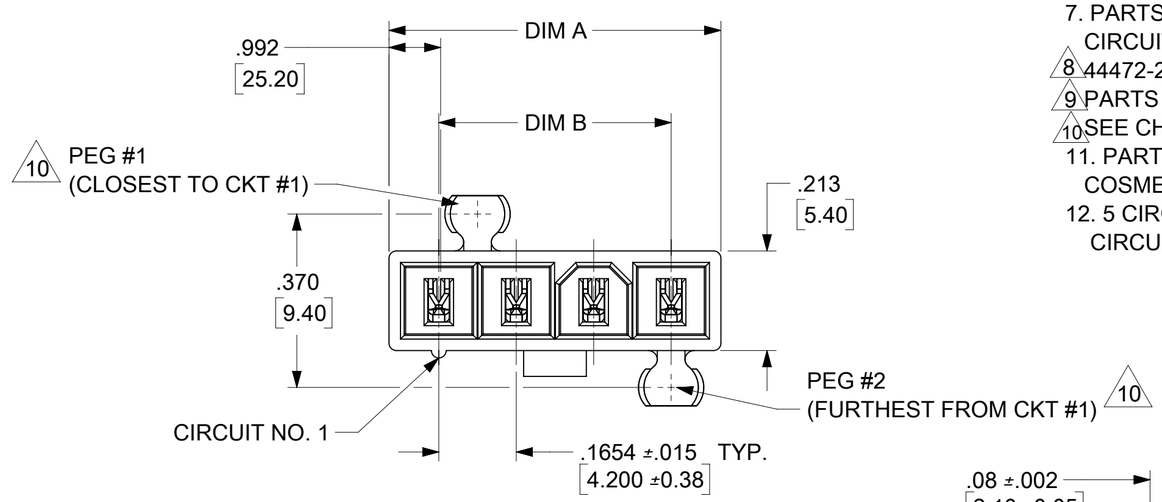

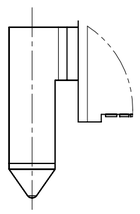

PEG DETAIL B
SEE NOTE 12

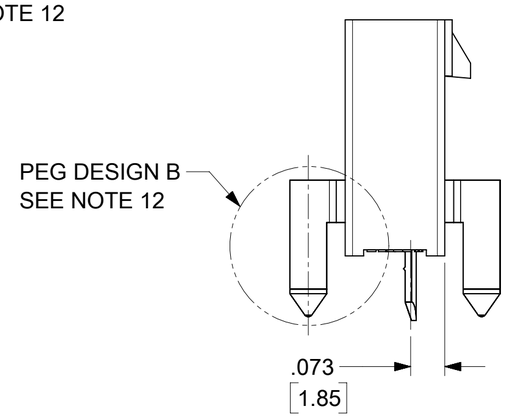

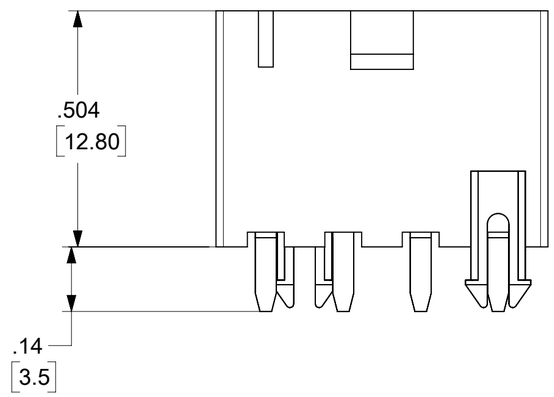

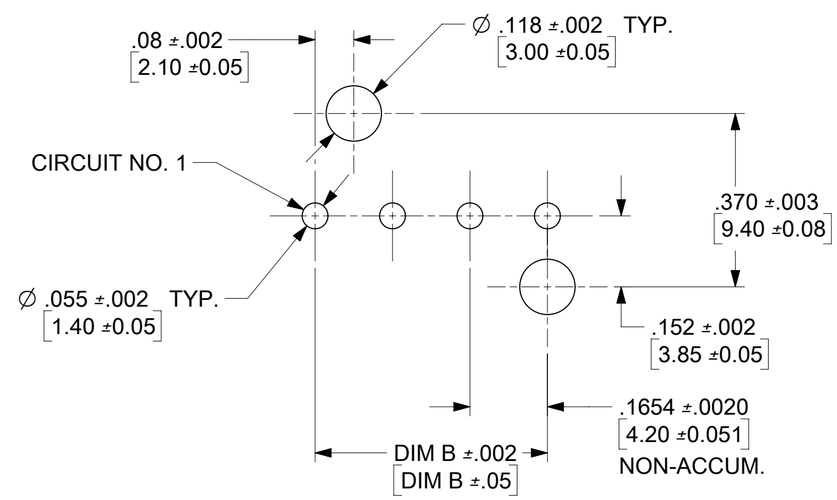

RECOMMENDED HOLE LAYOUT FOR
.070/(1.78) MAX. THICK P.C. BOARD
VIEWED FROM COMPONENT SIDE

LEGEND:

44472 - ** **

CIRCUIT SIZE
(04-12 FOR SINGLE ROW)
(02-24 FOR DUAL ROW)

ASSEMBLY VERSION
(01 THRU 49 FOR SINGLE ROW)
(50 THRU 99 FOR DUAL ROW)

SEE SHT. 2 FOR DUAL ROW
* THE CHART FOR SINGLE ROW PRODUCT IS ON PAGE 6.

THIS DRAWING CONTAINS INFORMATION THAT IS PROPRIETARY TO MOLEX ELECTRONIC TECHNOLOGIES, LLC AND SHOULD NOT BE USED WITHOUT WRITTEN PERMISSION

DIMENSION UNITS	SCALE
INCH/MM	NTS

GENERAL TOLERANCES (UNLESS SPECIFIED)

ANGULAR TOL	±	0.5 °
4 PLACES	±	
3 PLACES	±	
2 PLACES	±	0.4
1 PLACE	±	0.5
0 PLACES	±	

DRAFT WHERE APPLICABLE MUST REMAIN WITHIN DIMENSIONS

CURRENT REV DESC:

EC NO: 784313
DRWN: JERRYW8 2024/09/03
CHK'D: XQZHANG 2024/09/11
APPR: XQZHANG 2024/09/11

INITIAL REVISION:
DRWN: NNGUYEN 2013/05/08
APPR: FSMITH 2013/06/03

molex

MINI-FIT VERT HDR ASSY
W & W/O PEGS SINGLE AND DUAL ROW

PRODUCT CUSTOMER DRAWING

DOCUMENT NUMBER	DOC TYPE	DOC PART	REVISION
RSD-44472-XXXX	PSD	001	M7

THIRD ANGLE PROJECTION	DRAWING	SERIES	MATERIAL NUMBER	CUSTOMER	SHEET NUMBER
	C-SIZE	44472	SEE TABLE	GENERAL MARKET	1 OF 8

DOCUMENT STATUS	P1	RELEASE DATE	2024/09/11 06:39:21

FORMAT: master-tb-prod-C
REVISION: J1
DATE: 2021/05/01

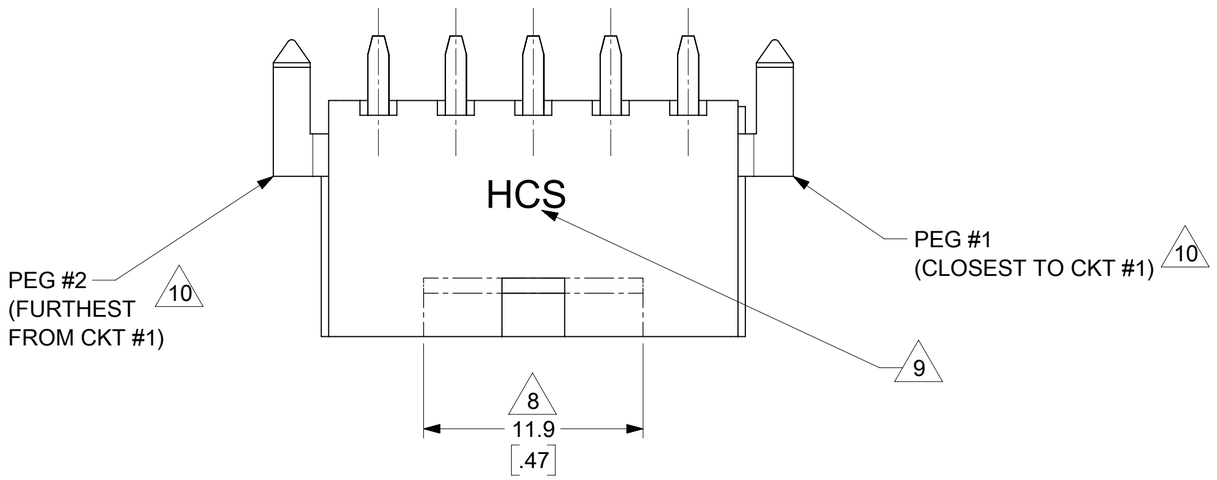

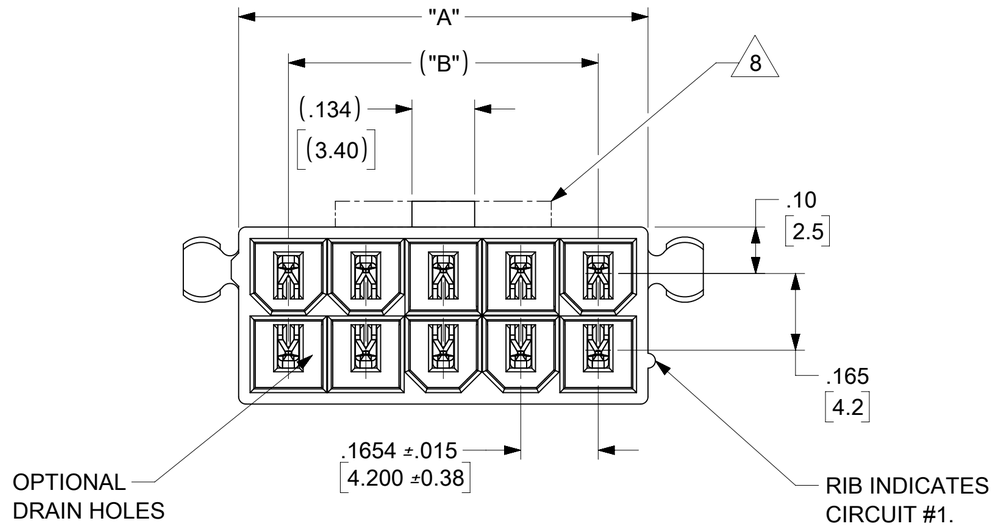

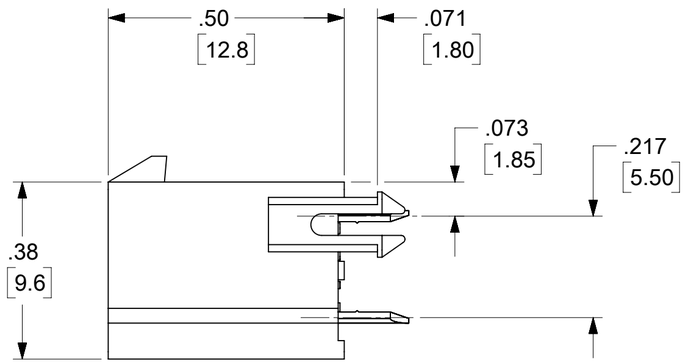

CKT SIZE	DIM "A"	DIM "B"	DIM "C"
2	.21 [5.4]	---	.370 [9.40]
4	.38 [9.6]	.17 [4.2]	.535 [13.60]
6	.54 [13.8]	.33 [8.4]	.701 [17.80]
8	.71 [18.0]	.50 [12.6]	.866 [22.00]
10	.87 [22.2]	.66 [16.8]	1.031 [26.20]
12	1.04 [26.4]	.83 [21.0]	1.197 [30.40]
14	1.20 [30.6]	.99 [25.2]	1.362 [34.60]
16	1.37 [34.8]	1.16 [29.4]	1.528 [38.80]
18	1.54 [39.0]	1.32 [33.6]	1.693 [43.00]
20	1.70 [43.2]	1.49 [37.8]	1.858 [47.20]
22	1.87 [47.4]	1.65 [42.0]	2.024 [51.40]
24	2.03 [51.6]	1.82 [46.2]	2.189 [55.60]

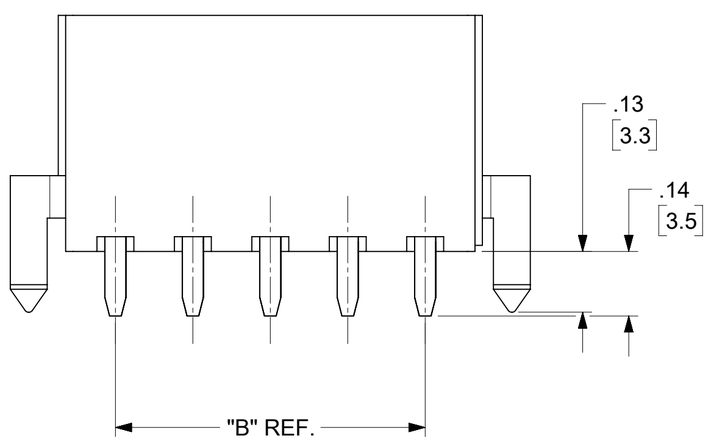

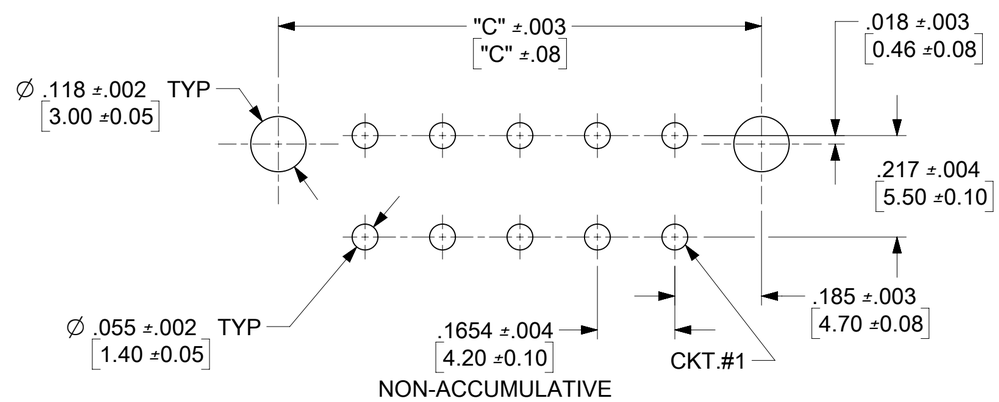

RECOMMENDED HOLE LAYOUT FOR .070/(1.78) MAX. THICK P.C. BOARD
VIEWED FROM COMPONENT SIDE

SEE SHT. 1 FOR SINGLE ROW

THIS DRAWING CONTAINS INFORMATION THAT IS PROPRIETARY TO MOLEX ELECTRONIC TECHNOLOGIES, LLC AND SHOULD NOT BE USED WITHOUT WRITTEN PERMISSION

DIMENSION UNITS	SCALE
INCH/MM	NTS

GENERAL TOLERANCES (UNLESS SPECIFIED)

ANGULAR TOL	±	0.5 °
4 PLACES	±	
3 PLACES	±	
2 PLACES	±	0.4
1 PLACE	±	0.5
0 PLACES	±	

DRAFT WHERE APPLICABLE MUST REMAIN WITHIN DIMENSIONS

CURRENT REV DESC:

EC NO: 784313
DRWN: JERRYW8 2024/09/03
CHK'D: XQZHANG 2024/09/11
APPR: XQZHANG 2024/09/11

INITIAL REVISION:
DRWN: NNGUYEN 2013/05/08
APPR: FSMITH 2013/06/03

molex

MINI-FIT VERT HDR ASSY
W & W/O PEGS SINGLE AND DUAL ROW

PRODUCT CUSTOMER DRAWING

DOCUMENT NUMBER	DOC TYPE	DOC PART	REVISION
RSD-44472-XXXX	PSD	001	M7

THIRD ANGLE PROJECTION	DRAWING	SERIES	MATERIAL NUMBER	CUSTOMER	SHEET NUMBER
	C-SIZE	44472	SEE TABLE	GENERAL MARKET	2 OF 8

DOCUMENT STATUS	P1	RELEASE DATE	2024/09/11 06:39:21

FORMAT: master-tb-prod-C
REVISION: J1
DATE: 2021/05/01

DUAL ROW PART NUMBERS WITH MATTE TIN PLATING

WITH PEGS

PLATING:	1 (SEE NOTE 2)	PLATING:	1 (SEE NOTE 2)	PLATING:	1 (SEE NOTE 2)	PLATING:	1 (SEE NOTE 2)
DRAINS:	WITHOUT DRAIN HOLES	DRAINS:	WITHOUT DRAIN HOLES	DRAINS:	WITHOUT DRAIN HOLES	DRAINS:	WITHOUT DRAIN HOLES
PEGS:	WITH PEGS	PEGS:	WITH PEGS	PEGS:	WITH PEGS	PEGS:	WITH PEGS
MAT'L:	94V-2 [NATURAL]	MAT'L:	94V-0 [NATURAL]	MAT'L:	94V-2 [NATURAL]	MAT'L:	94V-0 [NATURAL]
PACKAGING:	PK-5566-001	PACKAGING:	PK-5566-001	PACKAGING:	PK-5566-001	PACKAGING:	PK-5566-001
ITEM NO.	CKTS	ITEM NO.	CKTS	ITEM NO.	CKTS	ITEM NO.	CKTS
44472-0250	2	44472-0251	2		2		2
44472-0450	4	44472-0451	4	44472-0452	4	44472-0453	4
44472-0650	6	44472-0651	6	44472-0652	6	44472-0653	6
44472-0850	8	44472-0851	8	44472-0852	8	44472-0853	8
44472-1050	10	44472-1051	10	44472-1052	10	44472-1053	10
44472-1250	12	44472-1251	12	44472-1252	12	44472-1253	12
44472-1450	14	44472-1451	14	44472-1452	14	44472-1453	14
44472-1650	16	44472-1651	16	44472-1652	16	44472-1653	16
44472-1850	18	44472-1851	18	44472-1852	18	44472-1853	18
44472-2050	20	44472-2051	20	44472-2052	20	44472-2053	20
44472-2250	22	44472-2251	22	44472-2252	22	44472-2253	22
44472-2450	24	44472-2451	24	44472-2452	24	44472-2453	24

WITHOUT PEGS

PLATING:	1 (SEE NOTE 2)	PLATING:	1 (SEE NOTE 2)	PLATING:	1 (SEE NOTE 2)	PLATING:	1 (SEE NOTE 2)
DRAINS:	WITHOUT DRAIN HOLES	DRAINS:	WITHOUT DRAIN HOLES	DRAINS:	WITHOUT DRAIN HOLES	DRAINS:	WITHOUT DRAIN HOLES
PEGS:	WITHOUT PEGS	PEGS:	WITHOUT PEGS	PEGS:	WITHOUT PEGS	PEGS:	WITHOUT PEGS
MAT'L:	94V-2 [NATURAL]	MAT'L:	94V-0 [NATURAL]	MAT'L:	94V-2 [NATURAL]	MAT'L:	94V-0 [NATURAL]
PACKAGING:	PK-5566-001	PACKAGING:	PK-5566-001	PACKAGING:	PK-5566-001	PACKAGING:	PK-5566-001
ITEM NO. / HOUSING NO.	CKTS	ITEM NO.	CKTS	ITEM NO.	CKTS	ITEM NO.	CKTS
44472-0254	2	44472-0255	2	44472-0256	2	44472-0257	2
44472-0454	4	44472-0455	4	44472-0456	4	44472-0457	4
44472-0654	6	44472-0655	6	44472-0656	6	44472-0657	6
44472-0854	8	44472-0855	8	44472-0856	8	44472-0857	8
44472-1054	10	44472-1055	10	44472-1056	10	44472-1057	10
44472-1254	12	44472-1255	12	44472-1256	12	44472-1257	12
44472-1454	14	44472-1455	14	44472-1456	14	44472-1457	14
44472-1654	16	44472-1655	16	44472-1656	16	44472-1657	16
44472-1854	18	44472-1855	18	44472-1856	18	44472-1857	18
44472-2054	20	44472-2055	20	44472-2056	20	44472-2057	20
44472-2254	22	44472-2255	22	44472-2256	22	44472-2257	22
44472-2454	24	44472-2455	24	44472-2456	24	44472-2457	24

-ITEMS PRECEDED BY AN "X" ARE NOT AVAILABLE.

THIS DRAWING CONTAINS INFORMATION THAT IS PROPRIETARY TO MOLEX ELECTRONIC TECHNOLOGIES, LLC AND SHOULD NOT BE USED WITHOUT WRITTEN PERMISSION

DIMENSION UNITS	INCH/MM
SCALE	NTS
GENERAL TOLERANCES (UNLESS SPECIFIED)	
ANGULAR TOL	± 0.5 °
4 PLACES	±
3 PLACES	±
2 PLACES	± 0.4
1 PLACE	± 0.5
0 PLACES	±
DRAFT WHERE APPLICABLE MUST REMAIN WITHIN DIMENSIONS	

CURRENT REV DESC:

EC NO: 784313
DRWN: JERRYW8 2024/09/03
CHK'D: XQZHANG 2024/09/11
APPR: XQZHANG 2024/09/11

INITIAL REVISION:
DRWN: NNGUYEN 2013/05/08
APPR: FSMITH 2013/06/03

THIRD ANGLE PROJECTION | DRAWING: C-SIZE | SERIES: 44472

molex

MINI-FIT VERT HDR ASSY
W & W/O PEGS SINGLE AND DUAL ROW

PRODUCT CUSTOMER DRAWING

DOCUMENT NUMBER	DOC TYPE	DOC PART	REVISION
RSD-44472-XXXX	PSD	001	M7

MATERIAL NUMBER	CUSTOMER	SHEET NUMBER
SEE TABLE	GENERAL MARKET	3 OF 8

DOCUMENT STATUS	P1	RELEASE DATE	2024/09/11 06:39:21

FORMAT: master-tb-prod-C
REVISION: J1
DATE: 2021/05/01

DUAL ROW PART NUMBERS WITH SELECT GOLD PLATING

WITH PEGS							
PLATING:	2 (SEE NOTE 2)			PLATING:	2 (SEE NOTE 2)		
DRAINS:	WITHOUT DRAIN HOLES			DRAINS:	WITHOUT DRAIN HOLES		
PEGS:	WITH PEGS			PEGS:	WITH PEGS		
MAT'L:	94V-2 [NATURAL]			MAT'L:	94V-0 [NATURAL]		
PACKAGING:	PK-5566-001			PACKAGING:	PK-5566-001		
	ITEM NO.		CKTS		ITEM NO.		CKTS
X	44472-0260		2	X	44472-0261		2
X	44472-0460		4	X	44472-0461		4
X	44472-0660		6	X	44472-0661		6
X	44472-0860		8	X	44472-0861		8
X	44472-1060		10	X	44472-1061		10
X	44472-1260		12	X	44472-1261		12
X	44472-1460		14	X	44472-1461		14
X	44472-1660		16	X	44472-1661		16
X	44472-1860		18	X	44472-1861		18
X	44472-2060		20	X	44472-2061		20
X	44472-2260		22	X	44472-2261		22
X	44472-2460		24		44472-2461		24

WITHOUT PEGS							
PLATING:	2 (SEE NOTE 2)			PLATING:	2 (SEE NOTE 2)		
DRAINS:	WITHOUT DRAIN HOLES			DRAINS:	WITHOUT DRAIN HOLES		
PEGS:	WITHOUT PEGS			PEGS:	WITHOUT PEGS		
MAT'L:	94V-2 [NATURAL]			MAT'L:	94V-0 [NATURAL]		
PACKAGING:	PK-5566-001			PACKAGING:	PK-5566-001		
	ITEM NO.		CKTS		ITEM NO.		CKTS
X	44472-0264		2	X	44472-0265		2
X	44472-0464		4	X	44472-0465		4
X	44472-0664		6	X	44472-0665		6
X	44472-0864		8	X	44472-0865		8
X	44472-1064		10	X	44472-1065		10
X	44472-1264		12	X	44472-1265		12
X	44472-1464		14	X	44472-1465		14
X	44472-1664		16	X	44472-1665		16
X	44472-1864		18	X	44472-1865		18
X	44472-2064		20	X	44472-2065		20
X	44472-2264		22		44472-2265		22
X	44472-2464		24	X	44472-2465		24

-ITEMS PRECEDED BY AN "X" ARE NOT AVAILABLE.

THIS DRAWING CONTAINS INFORMATION THAT IS PROPRIETARY TO MOLEX ELECTRONIC TECHNOLOGIES, LLC AND SHOULD NOT BE USED WITHOUT WRITTEN PERMISSION

DIMENSION UNITS	SCALE
INCH/MM	NTS

GENERAL TOLERANCES (UNLESS SPECIFIED)

ANGULAR TOL	±	0.5 °
4 PLACES	±	
3 PLACES	±	
2 PLACES	±	0.4
1 PLACE	±	0.5
0 PLACES	±	

DRAFT WHERE APPLICABLE MUST REMAIN WITHIN DIMENSIONS

CURRENT REV DESC:

EC NO: 784313
DRWN: JERRYW8 2024/09/03
CHK'D: XQZHANG 2024/09/11
APPR: XQZHANG 2024/09/11

INITIAL REVISION:
DRWN: NNGUYEN 2013/05/08
APPR: FSMITH 2013/06/03

THIRD ANGLE PROJECTION | DRAWING: C-SIZE | SERIES: 44472

molex

MINI-FIT VERT HDR ASSY
W & W/O PEGS SINGLE AND DUAL ROW

PRODUCT CUSTOMER DRAWING

DOCUMENT NUMBER	DOC TYPE	DOC PART	REVISION
RSD-44472-XXXX	PSD	001	M7

MATERIAL NUMBER	CUSTOMER	SHEET NUMBER
SEE TABLE	GENERAL MARKET	4 OF 8

DOCUMENT STATUS	P1	RELEASE DATE	2024/09/11 06:39:21

FORMAT: master-tb-prod-C
REVISION: J1
DATE: 2021/05/01

DUAL ROW PART NUMBERS WITH WIDE LATCH OPTION

WITH PEGS			
PLATING:	1 (SEE NOTE 2)		
DRAINS:	WITHOUT DRAIN HOLES		
PEGS:	WITH PEGS		
MAT'L:	94V-2 [NATURAL]		
PACKAGING:	PK-5566-001		
	ITEM NO.		CKTS
			2
X	44472-0470		4
X	44472-0670		6
X	44472-0870		8
X	44472-1070		10
X	44472-1270		12
X	44472-1470		14
X	44472-1670		16
X	44472-1870		18
X	44472-2070		20
X	44472-2270		22
	44472-2470	8	24

-ITEMS PRECEDED BY AN "X" ARE NOT AVAILABLE.

THIS DRAWING CONTAINS INFORMATION THAT IS PROPRIETARY TO MOLEX ELECTRONIC TECHNOLOGIES, LLC AND SHOULD NOT BE USED WITHOUT WRITTEN PERMISSION

DIMENSION UNITS	SCALE
INCH/MM	NTS

GENERAL TOLERANCES (UNLESS SPECIFIED)

ANGULAR TOL	±	0.5 °
4 PLACES	±	
3 PLACES	±	
2 PLACES	±	0.4
1 PLACE	±	0.5
0 PLACES	±	

DRAFT WHERE APPLICABLE MUST REMAIN WITHIN DIMENSIONS

CURRENT REV DESC:

EC NO: 784313
DRWN: JERRYW8 2024/09/03
CHK'D: XQZHANG 2024/09/11
APPR: XQZHANG 2024/09/11

INITIAL REVISION:
DRWN: NNGUYEN 2013/05/08
APPR: FSMITH 2013/06/03

THIRD ANGLE PROJECTION | DRAWING: C-SIZE | SERIES: 44472

molex

MINI-FIT VERT HDR ASSY
W & W/O PEGS SINGLE AND DUAL ROW

PRODUCT CUSTOMER DRAWING

DOCUMENT NUMBER	DOC TYPE	DOC PART	REVISION
RSD-44472-XXXX	PSD	001	M7

MATERIAL NUMBER	CUSTOMER	SHEET NUMBER
SEE TABLE	GENERAL MARKET	5 OF 8

DOCUMENT STATUS	P1	RELEASE DATE	2024/09/11 06:39:21

FORMAT: master-tb-prod-C
REVISION: 21
DATE: 2021/05/01

SINGLE ROW PART NUMBERS WITH PEGS

MATTE TIN PLATING							
PLATING:		PLATING:		PLATING:	1 (SEE NOTE 2)	PLATING:	1 (SEE NOTE 2)
DRAINS:		DRAINS:		DRAINS:	WITHOUT DRAIN HOLES	DRAINS:	WITHOUT DRAIN HOLES
PEGS:		PEGS:		PEGS:	WITH PEGS	PEGS:	WITH PEGS
MAT'L:		MAT'L:		MAT'L:	94V-2 [NATURAL]	MAT'L:	94V-0 [NATURAL]
PACKAGING:		PACKAGING:		PACKAGING:	PK-5566-002	PACKAGING:	PK-5566-002

	ITEM NO.		CKTS		ITEM NO.		CKTS		ITEM NO.		CKTS		ITEM NO.		CKTS
									44472-0403		4	X	44472-0404		4
								X	44472-0503		5		44472-0504		5
								X	44472-0603		6	X	44472-0604		6
								X	44472-0703		7	X	44472-0704		7
								X	44472-0803		8	X	44472-0804		8
								X	44472-0903		9	X	44472-0904		9
								X	44472-1003		10	X	44472-1004		10
								X	44472-1103		11	X	44472-1104		11
								X	44472-1203		12	X	44472-1204		12

GOLD PLATING							
PLATING:		PLATING:		PLATING:	2 (SEE NOTE 2)	PLATING:	2 (SEE NOTE 2)
DRAINS:		DRAINS:		DRAINS:	WITHOUT DRAIN HOLES	DRAINS:	WITHOUT DRAIN HOLES
PEGS:		PEGS:		PEGS:	WITH PEGS	PEGS:	WITH PEGS
MAT'L:		MAT'L:		MAT'L:	94V-2 [NATURAL]	MAT'L:	94V-0 [NATURAL]
PACKAGING:		PACKAGING:		PACKAGING:	PK-5566-002	PACKAGING:	PK-5566-002

	ITEM NO.		CKTS		ITEM NO.		CKTS		ITEM NO.		CKTS		ITEM NO.		CKTS
								X	44472-0407		4	X	44472-0408		4
								X	44472-0507		5	X	44472-0508		5
								X	44472-0607		6	X	44472-0608		6
								X	44472-0707		7	X	44472-0708		7
								X	44472-0807		8	X	44472-0808		8
								X	44472-0907		9	X	44472-0908		9
								X	44472-1007		10	X	44472-1008		10
								X	44472-1107		11	X	44472-1108		11
								X	44472-1207		12	X	44472-1208		12

-ITEMS PRECEDED BY AN "X" ARE NOT AVAILABLE.

THIS DRAWING CONTAINS INFORMATION THAT IS PROPRIETARY TO MOLEX ELECTRONIC TECHNOLOGIES, LLC AND SHOULD NOT BE USED WITHOUT WRITTEN PERMISSION

DIMENSION UNITS	SCALE
INCH/MM	NTS

GENERAL TOLERANCES (UNLESS SPECIFIED)

ANGULAR TOL	±	0.5 °
4 PLACES	±	
3 PLACES	±	
2 PLACES	±	0.4
1 PLACE	±	0.5
0 PLACES	±	

DRAFT WHERE APPLICABLE MUST REMAIN WITHIN DIMENSIONS

CURRENT REV DESC:

EC NO: 784313
DRWN: JERRYW8 2024/09/03
CHK'D: XQZHANG 2024/09/11
APPR: XQZHANG 2024/09/11

INITIAL REVISION:
DRWN: NNGUYEN 2013/05/08
APPR: FSMITH 2013/06/03

THIRD ANGLE PROJECTION | DRAWING: C-SIZE | SERIES: 44472

molex

MINI-FIT VERT HDR ASSY
W & W/O PEGS SINGLE AND DUAL ROW

PRODUCT CUSTOMER DRAWING

DOCUMENT NUMBER	DOC TYPE	DOC PART	REVISION
RSD-44472-XXXX	PSD	001	M7

MATERIAL NUMBER	CUSTOMER	SHEET NUMBER
SEE TABLE	GENERAL MARKET	6 OF 8

DOCUMENT STATUS	P1	RELEASE DATE	2024/09/11 06:39:21

FORMAT: master-tb-prod-C
REVISION: J1
DATE: 2021/05/01

DUAL ROW PART NUMBERS 1 PEG REMOVED

PLATING:	1 (SEE NOTE 2)			PLATING:	1 (SEE NOTE 2)			PLATING:				PLATING:			
DRAINS:	WITHOUT DRAIN HOLES			DRAINS:	WITHOUT DRAIN HOLES			DRAINS:				DRAINS:			
PEGS:	PEG #1 REMOVED			PEGS:	PEG #1 REMOVED			PEGS:	PEG #1 REMOVED			PEGS:	PEG #1 REMOVED		
MAT'L:	94V-2 [NATURAL]			MAT'L:	94V-2 [NATURAL]			MAT'L:				MAT'L:			
PACKAGING:	PK-5566-001			PACKAGING:	PK-5566-001			PACKAGING:				PACKAGING:			
	ITEM NO.		CKTS		ITEM NO.		CKTS		ITEM NO.		CKTS		ITEM NO.		CKTS
X	44472-0273		2	X	44472-0274		2				2				2
X	44472-0473		4	X	44472-0474		4				4				4
X	44472-0673		6	X	44472-0674		6				6				6
X	44472-0873		8	X	44472-0874		8				8				8
X	44472-1073		10	X	44472-1074		10				10				10
X	44472-1273		12	X	44472-1274		12				12				12
X	44472-1473		14	X	44472-1474		14				14				14
X	44472-1673		16	X	44472-1674		16				16				16
X	44472-1873		18	X	44472-1874		18				18				18
	44472-2073		20		44472-2074		20				20				20
X	44472-2273		22	X	44472-2274		22				22				22
X	44472-2473		24	X	44472-2474		24				24				24

PLATING:	1 (SEE NOTE 2)			PLATING:	1 (SEE NOTE 2)			PLATING:				PLATING:			
DRAINS:	WITHOUT DRAIN HOLES			DRAINS:	WITHOUT DRAIN HOLES			DRAINS:				DRAINS:			
PEGS:	PEG #2 REMOVED			PEGS:	PEG #2 REMOVED			PEGS:	PEG #2 REMOVED			PEGS:	PEG #2 REMOVED		
MAT'L:	94V-2 [NATURAL]			MAT'L:	94V-2 [NATURAL]			MAT'L:				MAT'L:			
PACKAGING:	PK-5566-001			PACKAGING:	PK-5566-001			PACKAGING:				PACKAGING:			
	ITEM NO.		CKTS		ITEM NO.		CKTS		ITEM NO.		CKTS		ITEM NO.		CKTS
X	44472-0277		2	X	44472-0278		2				2				2
X	44472-0477		4	X	44472-0478		4				4				4
X	44472-0677		6	X	44472-0678		6				6				6
X	44472-0877		8	X	44472-0878		8				8				8
X	44472-1077		10	X	44472-1078		10				10				10
X	44472-1277		12	X	44472-1278		12				12				12
X	44472-1477		14	X	44472-1478		14				14				14
X	44472-1677		16	X	44472-1678		16				16				16
X	44472-1877		18	X	44472-1878		18				18				18
	44472-2077		20		44472-2078		20				20				20
X	44472-2277		22	X	44472-2278		22				22				22
X	44472-2477		24	X	44472-2478		24				24				24

-ITEMS PRECEDED BY AN "X" ARE NOT AVAILABLE.

THIS DRAWING CONTAINS INFORMATION THAT IS PROPRIETARY TO MOLEX ELECTRONIC TECHNOLOGIES, LLC AND SHOULD NOT BE USED WITHOUT WRITTEN PERMISSION

DIMENSION UNITS	SCALE
INCH/MM	NTS

GENERAL TOLERANCES (UNLESS SPECIFIED)

ANGULAR TOL	±	0.5 °
4 PLACES	±	
3 PLACES	±	
2 PLACES	±	0.4
1 PLACE	±	0.5
0 PLACES	±	

DRAFT WHERE APPLICABLE MUST REMAIN WITHIN DIMENSIONS

CURRENT REV DESC:

EC NO: 784313
DRWN: JERRYW8 2024/09/03
CHK'D: XQZHANG 2024/09/11
APPR: XQZHANG 2024/09/11

INITIAL REVISION:
DRWN: NNGUYEN 2013/05/08
APPR: FSMITH 2013/06/03

molex

MINI-FIT VERT HDR ASSY
W & W/O PEGS SINGLE AND DUAL ROW

PRODUCT CUSTOMER DRAWING

DOCUMENT NUMBER	DOC TYPE	DOC PART	REVISION
RSD-44472-XXXX	PSD	001	M7

THIRD ANGLE PROJECTION	DRAWING	SERIES	MATERIAL NUMBER	CUSTOMER	SHEET NUMBER
	C-SIZE	44472	SEE TABLE	GENERAL MARKET	7 OF 8

DOCUMENT STATUS	P1	RELEASE DATE	2024/09/11 06:39:21

FORMAT: master-tb-prod-C
REVISION: 21
DATE: 2021/05/01

DUAL ROW PART NUMBERS WITH MATTE TIN PLATING
(DO NOT USE FOR NEW APPLICATION)

WITH PEGS	
PLATING:	1 (SEE NOTE 2)
DRAINS:	WITHOUT DRAIN HOLES
PEGS:	WITH PEGS
MAT'L:	94V-0 [NATURAL]
PACKAGING:	

	ITEM NO.			CKTS
	44472-0283	O		2
	44472-0483	O		4
	44472-0683	O		6
	44472-0883	O		8
	44472-1083	O		10
	44472-1283	O		12
	44472-1483	O		14
	44472-1683	O		16
	44472-1883	O		18
	44472-2083			20
	44472-2283			22
	44472-2483	O		24

"O" OBSOLETE

THIS DRAWING CONTAINS INFORMATION THAT IS PROPRIETARY TO MOLEX ELECTRONIC TECHNOLOGIES, LLC AND SHOULD NOT BE USED WITHOUT WRITTEN PERMISSION

DIMENSION UNITS	SCALE
INCH/MM	NTS

GENERAL TOLERANCES (UNLESS SPECIFIED)

ANGULAR TOL	±	0.5 °
4 PLACES	±	
3 PLACES	±	
2 PLACES	±	0.4
1 PLACE	±	0.5
0 PLACES	±	

DRAFT WHERE APPLICABLE MUST REMAIN WITHIN DIMENSIONS

CURRENT REV DESC:

EC NO: 784313
DRWN: JERRYW8 2024/09/03
CHK'D: XQZHANG 2024/09/11
APPR: XQZHANG 2024/09/11

INITIAL REVISION:
DRWN: NNGUYEN 2013/05/08
APPR: FSMITH 2013/06/03

THIRD ANGLE PROJECTION | DRAWING: C-SIZE | SERIES: 44472

molex

MINI-FIT VERT HDR ASSY
W & W/O PEGS SINGLE AND DUAL ROW

PRODUCT CUSTOMER DRAWING

DOCUMENT NUMBER	DOC TYPE	DOC PART	REVISION
RSD-44472-XXXX	PSD	001	M7

MATERIAL NUMBER	CUSTOMER	SHEET NUMBER
SEE TABLE	GENERAL MARKET	8 OF 8

DOCUMENT STATUS	P1	RELEASE DATE	2024/09/11 06:39:21

FORMAT: master-tb-prod-C
REVISION: J1
DATE: 2021/05/01