Jul.1.2024 Copyright 2024 HIROSE ELECTRIC CO., LTD. All Rights Reserved.
In case of consideration for using Automotive equipment / device which demand high reliability, kindly contact our sales window correspondents.

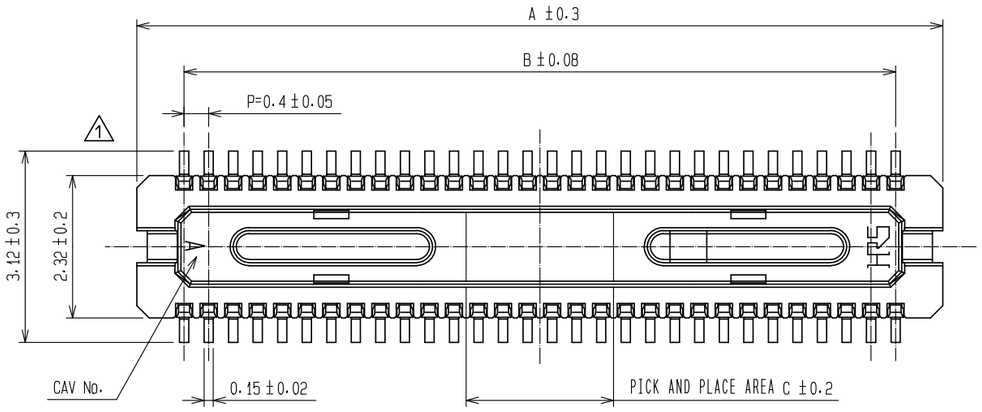

RECOMMENDED PATTERN

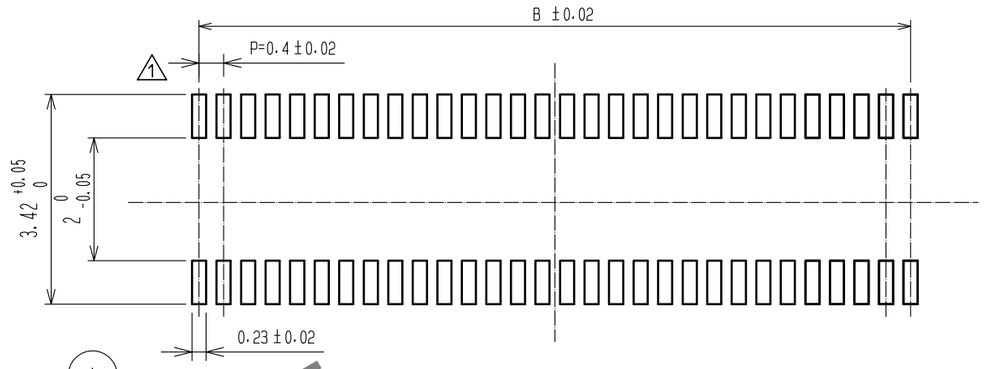

RECOMMENDED SOLDER PASTE THICHNESS : 120μm

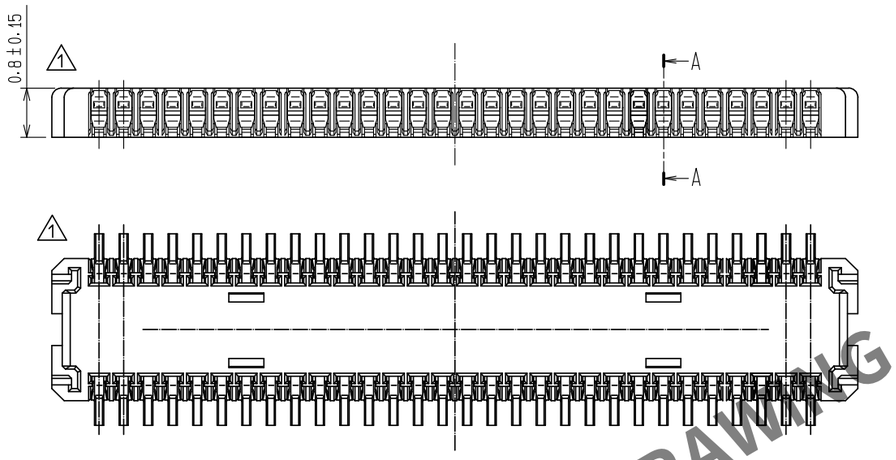

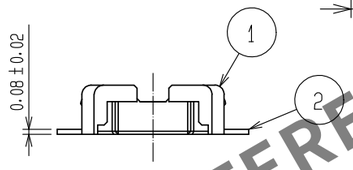

RECOMMENDED METAL MASK OPENING DIMENSHIONS FOR LEAD PAD(20:1)

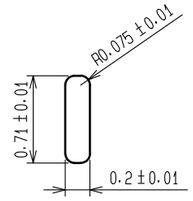

A-A(20:1)

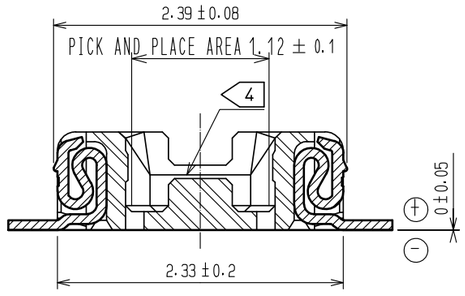

ENGAGEMENT FIGURE(20:1)

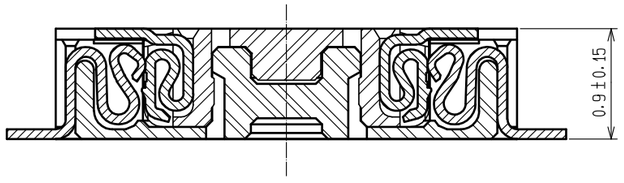

HRS DRAWING FOR REFERENCE

NOTE 1 . ALL LEADS CO-PLARITY SHALL BE 0.1 MAX.
2 . PER REEL : 5000 CONECTORS.
3 . AT THE BEGINNING OF THE REEL, 100 mm AT MIN SHALL BE EMPTY POCKETS.
AT THE END OF THE REEL, 160 mm AT MIN SHALL BE EMPTY POCKETS.
NO CAVITY ON THE CONNECTORS LESS THAN 24 POS.
4 CONTACT PLATIN GSPECIFICATIONS.
5 CONTACT ATEA : GOLD 0.05μm MIN.
SMT LEAD : GOLD 0.02μm MIN.
UNDERPLATING : NICKEL 1μm MIN.
(SUREFACE : SEALING)
METAL HOLD DOWN PLATING SPECIFICATIONS.
6 MOUNTING ATEA: TIN 1μm MIN.
UDNERPLATING : NICKEL 1μm MIN.

1

PART NO.	CODE NO.	A	B	C
DF30RC-80DP-0.4V(81)	—	17.14	15.6	3.2
DF30RC-70DP-0.4V(81)	—	15.14	13.6	2.8
DF30RC-60DP-0.4V(81)	CL684-1276-0-81	13.14	11.6	2.4
DF30RC-50DP-0.4V(81)	CL684-1275-7-81	11.14	9.6	2.0
DF30RC-44DP-0.4V(81)	CL684-1274-4-81	9.94	8.4	1.76
DF30RC-40DP-0.4V(81)	CL684-1273-1-81	9.14	7.6	1.6
DF30RC-34DP-0.4V(81)	CL684-1272-5-81	7.94	6.4	1.36
DF30RC-30DP-0.4V(81)	CL684-1271-9-81	7.14	5.6	1.2
DF30RC-24DP-0.4V(81)	CL684-1270-3-81	5.94	4.4	1.2
DF30RC-22DP-0.4V(81)	CL684-1269-4-81	5.54	4.0	1.2
DF30RC-20DP-0.4V(81)	CL684-1268-8-81	5.14	3.6	1.2
DF30RC-14DP-0.4V(81)	CL684-1296-8-81	3.94	2.4	1.2
DF30RC-10DP-0.4V(81)	CL684-1291-3-81	3.14	1.6	1.2

NO.	MATERIAL	FINISH , REMARKS	NO.	MATERIAL	FINISH , REMARKS
			5	PS	PLASTIC REEL(BLACK)
2	PHOSPHOR BRONZE	5	4	POLYESTER	CLEAR(COVER TAPE)
1	LCP	UL94V-0, BLACK	3	PS	CLEAR(ENMOSSED CARRIER TAPE)

UNITS	SCALE		COUNT	DESCRIPTION OF REVISIONS	DESIGNED	CHECKED	DATE
mm	10 : 1	1	8	DIS-H-00002752	SH. HOSODA	TS. MIYAZAKI	17. 10. 10

HRS HIROSE ELECTRIC CO., LTD.

APPROVED	: KH. IKEDA	06. 08. 05	DRAWING NO.	EDC3-312966-01
CHECKED	: TS. MIYAZAKI	06. 08. 05	PART NO.	DF30RC-*DP-0.4V(81)
DESIGNED	: TH. ARAI	06. 08. 04	CODE NO.	CL684-****-*-81
DRAWN	: NM. SATO	06. 08. 04		1/2

FORM HC0011-5-7

Jul.1.2024 Copyright 2024 HIROSE ELECTRIC CO., LTD. All Rights Reserved.
In case of consideration for using Automotive equipment / device which demand high reliability, kindly contact our sales window correspondents.

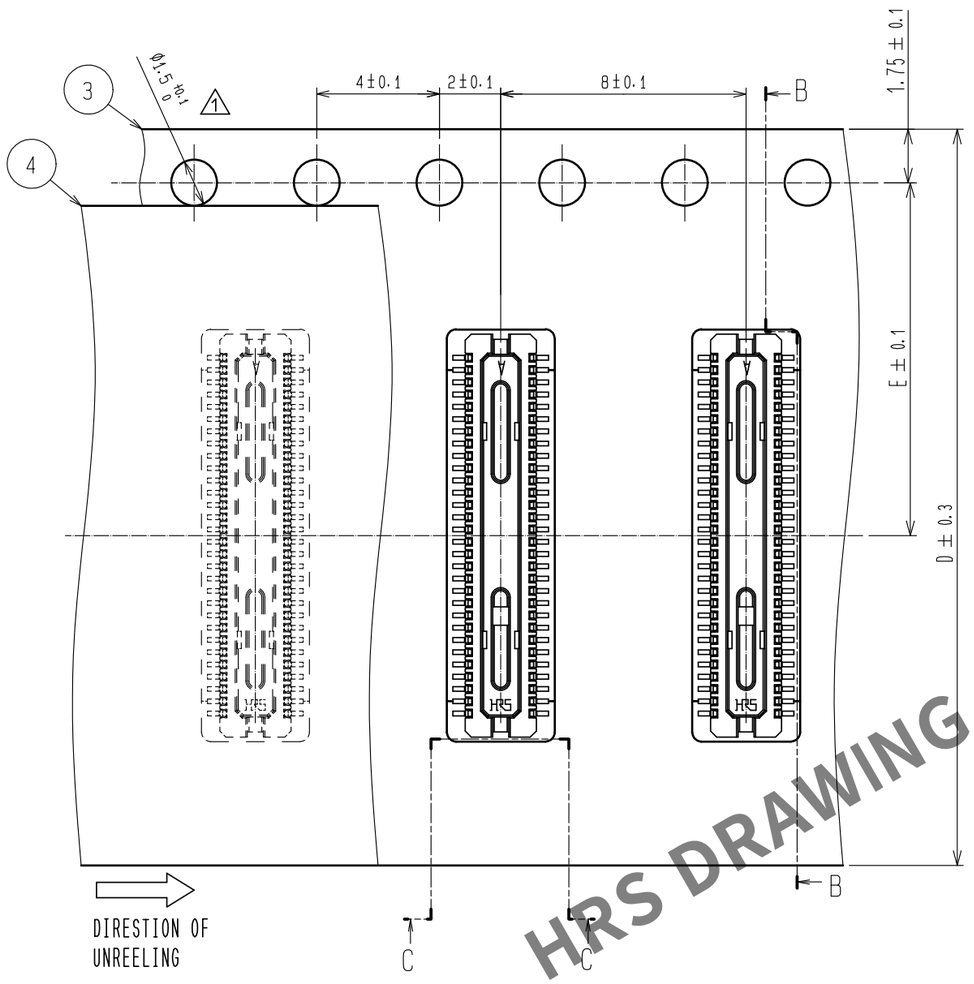

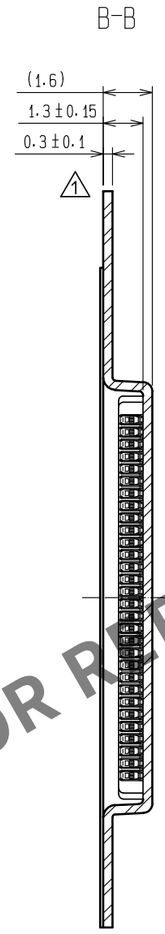

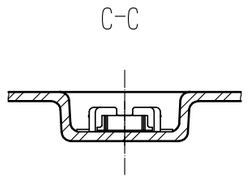

STYLE AND DIMENSION OF REEL(FREE SIZE)

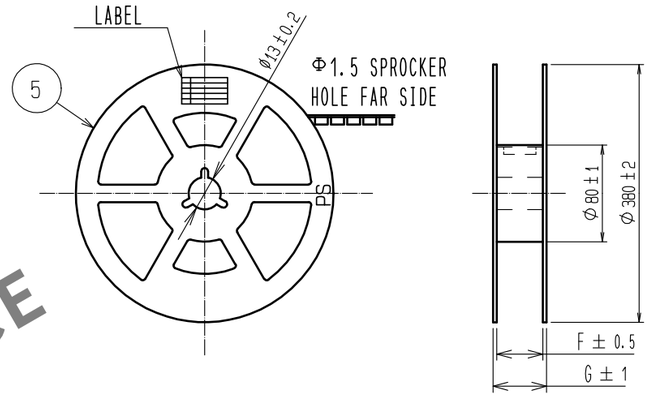

DETAIL OF PART NO. LABEL

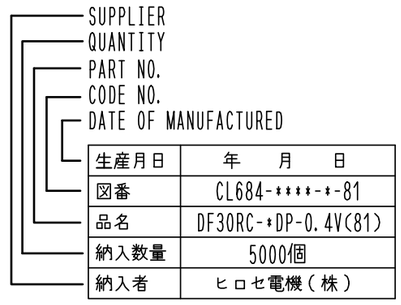

生産月日	年　月　日
図番	CL684-****-*-81
品名	DF30RC-*DP-0.4V(81)
納入数量	5000個
納入者	ヒロセ電機(株)

1

PART NO.	CODE NO.	D	E	F	G
DF30RC-80DP-0.4V(81)	—	24	11.5	25.5	29.5
DF30RC-70DP-0.4V(81)	—	24	11.5	25.5	29.5
DF30RC-60DP-0.4V(81)	CL684-1276-0-81	24	11.5	25.5	29.5
DF30RC-50DP-0.4V(81)	CL684-1275-7-81	24	11.5	25.5	29.5
DF30RC-44DP-0.4V(81)	CL684-1274-4-81	24	11.5	25.5	29.5
DF30RC-40DP-0.4V(81)	CL684-1273-1-81	16	7.5	17.5	21.5
DF30RC-34DP-0.4V(81)	CL684-1272-5-81	16	7.5	17.5	21.5
DF30RC-30DP-0.4V(81)	CL684-1271-9-81	16	7.5	17.5	21.5
DF30RC-24DP-0.4V(81)	CL684-1270-3-81	16	7.5	17.5	21.5
DF30RC-22DP-0.4V(81)	CL684-1269-4-81	16	7.5	17.5	21.5
DF30RC-20DP-0.4V(81)	CL684-1268-8-81	16	7.5	17.5	21.5
DF30RC-14DP-0.4V(81)	CL684-1296-8-81	16	7.5	17.5	21.5
DF30RC-10DP-0.4V(81)	CL684-1291-3-81	16	7.5	17.5	21.5

HRS DRAWING FOR REFERENCE

DRAWING NO.	EDC3-312966-01
PART NO.	DF30RC-*DP-0.4V(81)
CODE NO.	CL684-****-*-81

1 2/2