SAMZO | REAC/ROHS

| REV | ECN NO | DESRIPTION | DESIGN | APPROVAL | DATE |
|---|---|---|---|---|---|
| A1 | NEW | Replace frame | | | 2018.06.12 |

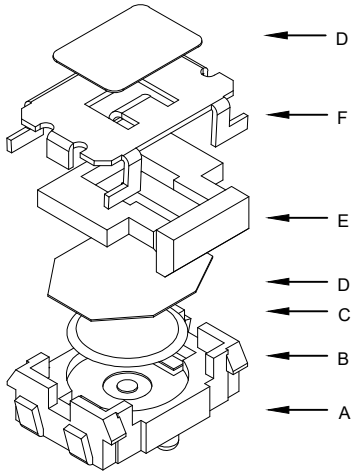


OUTLINE DRAWING -2

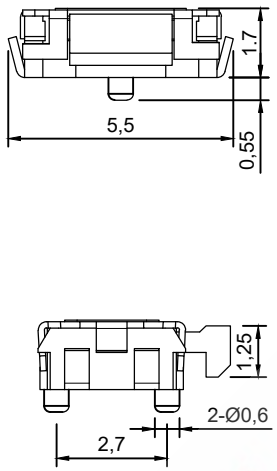


OUTLINE DRAWING -1

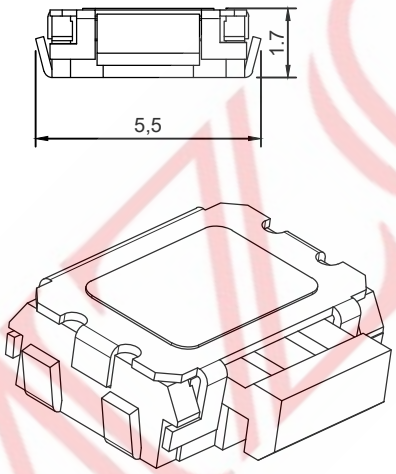


## 主要技术参数、性能
## The Main Thchnology Performance

| | |
|---|---|
| 额定电流、电压<br>Rate voltage.current | 50mA DC12V |
| 接触电阻<br>Contact resistance | ≤100mΩ |
| 按力<br>Operating force | ±100gf |
| 行程<br>Travel | 0.3±0.10mm |
| 绝缘电阻<br>Insulated resistance | ≥100MΩ |
| 介电强度<br>Dielectric strength | ≥250VAC/1min |

C 5 E 170 * 1 * 0
A B C D E F G H

A. 系列:C-微型侧按
B. 贴装方式:5-卧式贴片
C. 引脚规格:E-4PIN
D. 操作高度:170-1.70mm
E:操作力度:1-160/2-260gf
F:操作寿命:1-30,000/次
G:固定方式:1-无柱/2-带柱
H:物料编码:0-常规

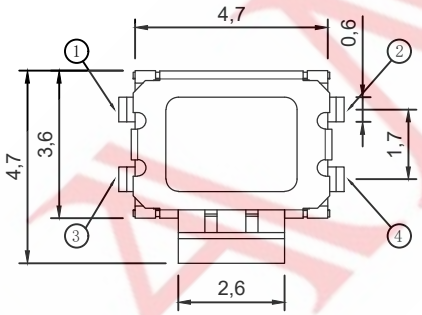


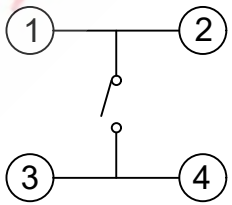


电路图
CIRCUIT DIAGRAM

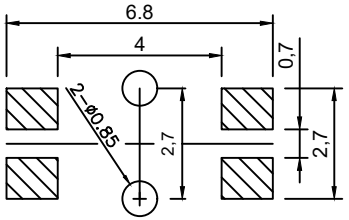


PCB. 焊接图
PCB. WELDING DRAWING

| 项目 ITEM | 名称 DESCRIPTION | 材质 MATERIAL | 数量 QTY | 表面处理/颜色 FINSH/COLOR |
|---|---|---|---|---|
| F | 盖板 | 不锈钢 | 1 | 清洗 |
| E | 按钮 | PPA | 1 | 黑色 |
| D | 防水层 | 聚酰亚胺 | / | 橙黄色 |
| C | 弹片 | 不锈钢 | 1 | 镀银 |
| B | 本体 | LCP | 1 | 黑色 |
| A | 卡件 | 黄铜 | 1 | 镀银 |

| | | |
|---|---|---|
| DESIGN | WANGGUIFA | 2018.06.12 |
| CHECKED | ZHENGUILAN | 2018.06.12 |
| APPROVED | LILIANJIANG | 2018.06.14 |

GENERAL TOLERANCE

| | |
|---|---|
| ≥0~2< | ±0.15 |
| ≥2~5< | ±0.25 |
| ≥0~2< | ±0.15 |
| ≥5 | ±0.35 |

FIRST VIEW

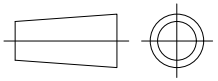

SCALE 1:1 UNIT mm

SAMZO COMPONENTS
Electronic switch and connector manufacturer

The copyright belongs to samzo parts [China] Co., Ltd. please use the material after samzo parts agree to authorize. The final right of interpretation belongs to samzo parts.
WWW.KKK-JP.COM

TITLE:: 3.6*4.7*1.7 侧按四脚中龟
DWG NO: C5E170-P3017
PART NO: C5E1701941
MODEL NO: C5E170-*-1-*-0
NAME: TACT SWITCH