Jul.1.2024 Copyright 2024 HIROSE ELECTRIC CO., LTD. All Rights Reserved.
In case of consideration for using Automotive equipment / device which demand high reliability, kindly contact our sales window correspondents.

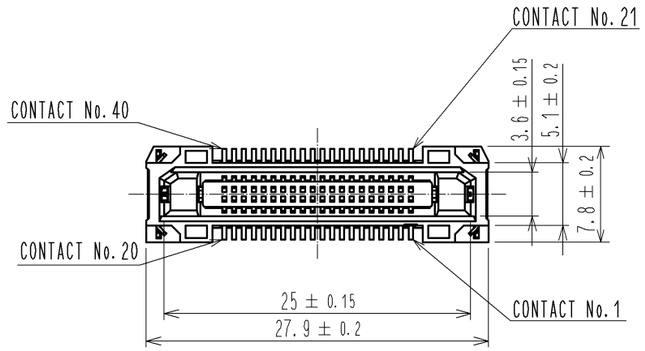

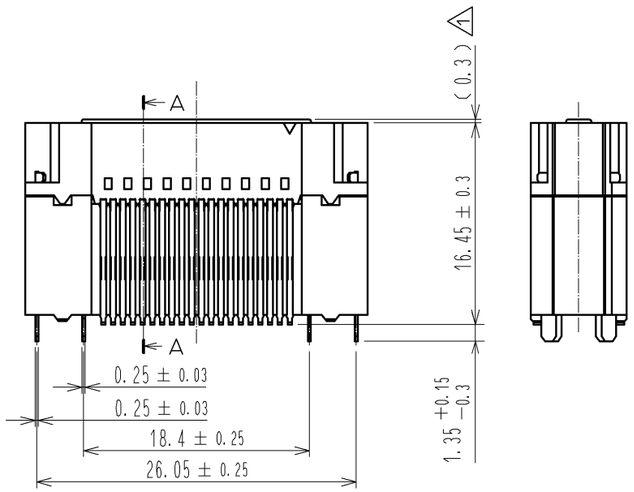

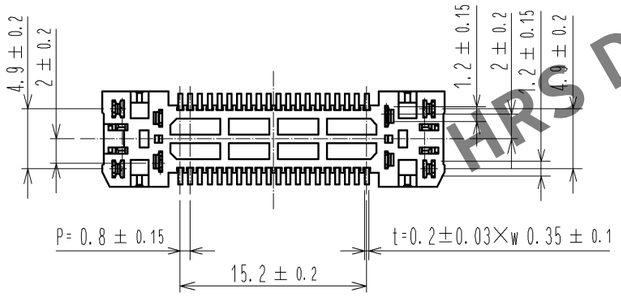

A−A(4:1)

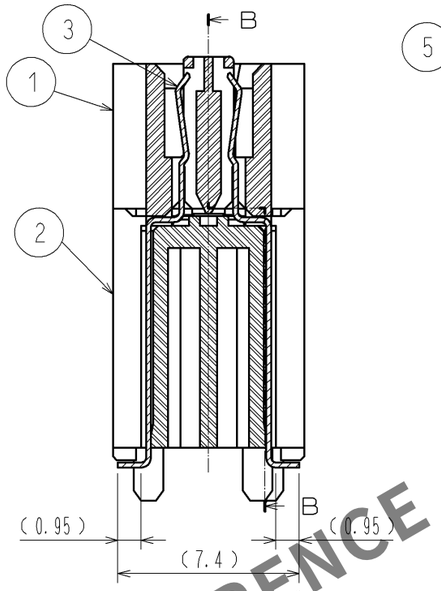

B−B(4:1)

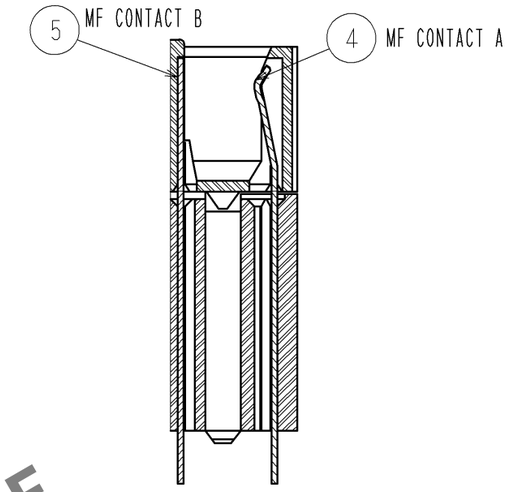

CROSS SECTION OF MATING(FREE)
STACKING HEIGHT=20mm

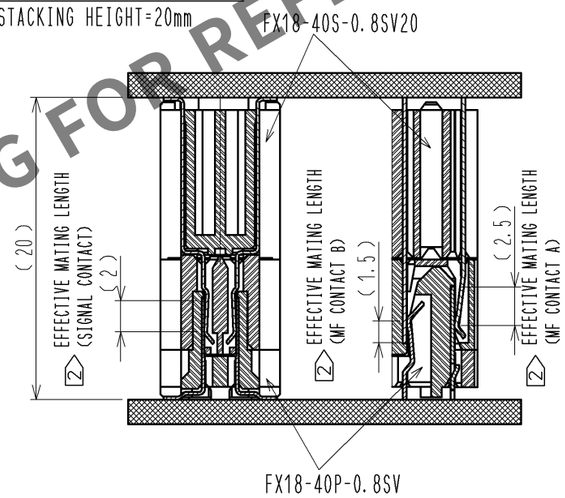

CROSS SECTION OF MATING(FREE)
STACKING HEIGHT=30mm

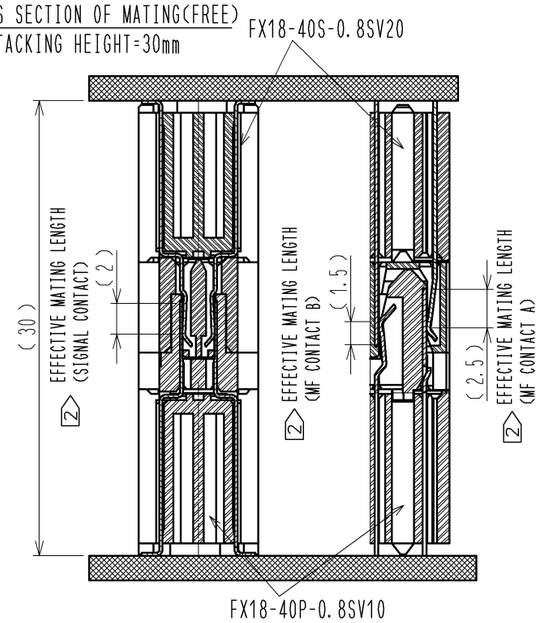

HRS DRAWING FOR REFERENCE

NOTE 1 LEAD CO−PLANARITY IS 0.1mm MAX.
2 CONTACTS ARE 3 STEPS SEQUENTIAL. (MF CONTACT A=>SIGNAL CONTACT=>MF CONTACT B)
WHEN USING THIS SEQUENTIAL STRUCTURE, PLEASE AVOID ANGLED INSERTION.
3 MF CONTACT A AND MF CONTACT B CAN BE USED AS POWER SUPPLY CONTACT. (3A/PIN MAX)
4 IT SHOWS THE VACUUM PICKUP AREA.(SEE PAGE 2)
REMOVE THE MYLAR TAPE BEFORE MATING CONNECTORS.
5 THIS IS PACKAGED IN TRAY.(60pcs/TRAY)
6 BLEMISH AND HIT MARK CAN BE OCCURED THROUGH OUT THE MANUFACTURING PROCESS WHICH DOESN' T AFFECT QUALITY LEVEL.
7 THE DIMENSIONS IN PARENTHESES ARE FOR REFERENCES.

NO.	MATERIAL	FINISH , REMARKS
3	PHOSPHOR BRONZE	CONTACT AREA:GOLD 0.1μm LEAD AREA:GOLD 0.03μm UNDER PLATING:NICKEL 1.3μm
2	POLYAMIDE	BLACK UL94V-0
1	POLYAMIDE	BLACK UL94V-0

NO.	MATERIAL	FINISH , REMARKS
7	POLYIMIDE	
6	POLYSTYRENE	
5	COPPER ALLOY	CONTACT AREA:GOLD 0.1μm LEAD AREA:TIN-PLATING 1μm UNDER PLATING:NICKEL 1.3μm
4	COPPER ALLOY	CONTACT AREA:GOLD 0.1μm LEAD AREA:TIN-PLATING 1μm UNDER PLATING:NICKEL 1.3μm

UNITS	SCALE	COUNT	DESCRIPTION OF REVISIONS	DESIGNED	CHECKED	DATE
mm	2 : 1	1 4	DIS-F-005578	TH. SANO	KI. HIROKAWA	11. 07. 21

HRS HIROSE ELECTRIC CO., LTD.

APPROVED	: HS. OKAWA	11. 03. 18
CHECKED	: KI. HIROKAWA	11. 03. 18
DESIGNED	: TH. SANO	11. 03. 18
DRAWN	: TH. SANO	11. 03. 18

DRAWING NO. EDC3-334390-00
PART NO. FX18-40S-0.8SV20
CODE NO. CL579-0030-0-00
1 1/2

Jul.1.2024 Copyright 2024 HIROSE ELECTRIC CO., LTD. All Rights Reserved.
In case of consideration for using Automotive equipment / device which demand high reliability, kindly contact our sales window correspondents.

RECOMMENDED LAND PATTERN DIMENSION OF PCB(2:1)
(PCB THICKNESS:t=1.6mm METAL MASK THICKNESS:t=0.12mm)

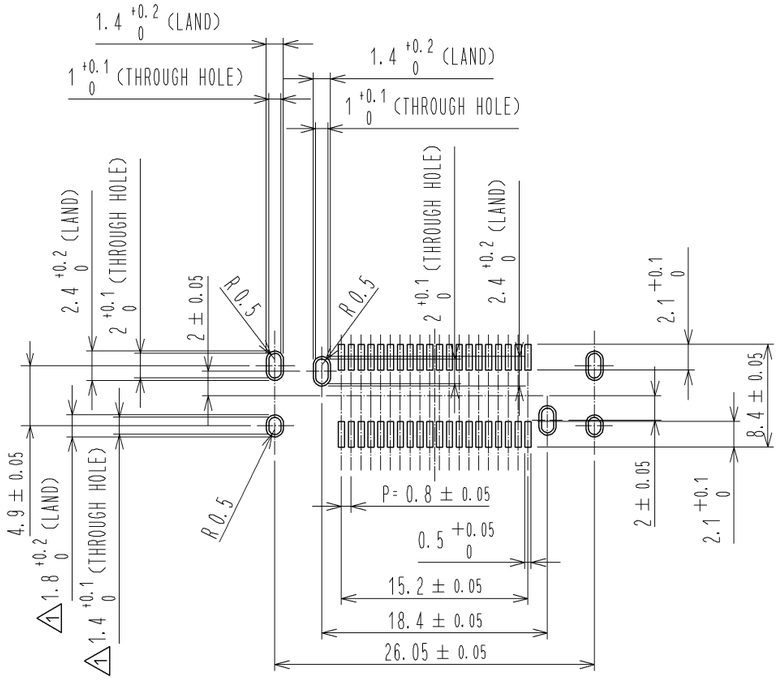

5 DRAWING FOR PACKING(1:2)

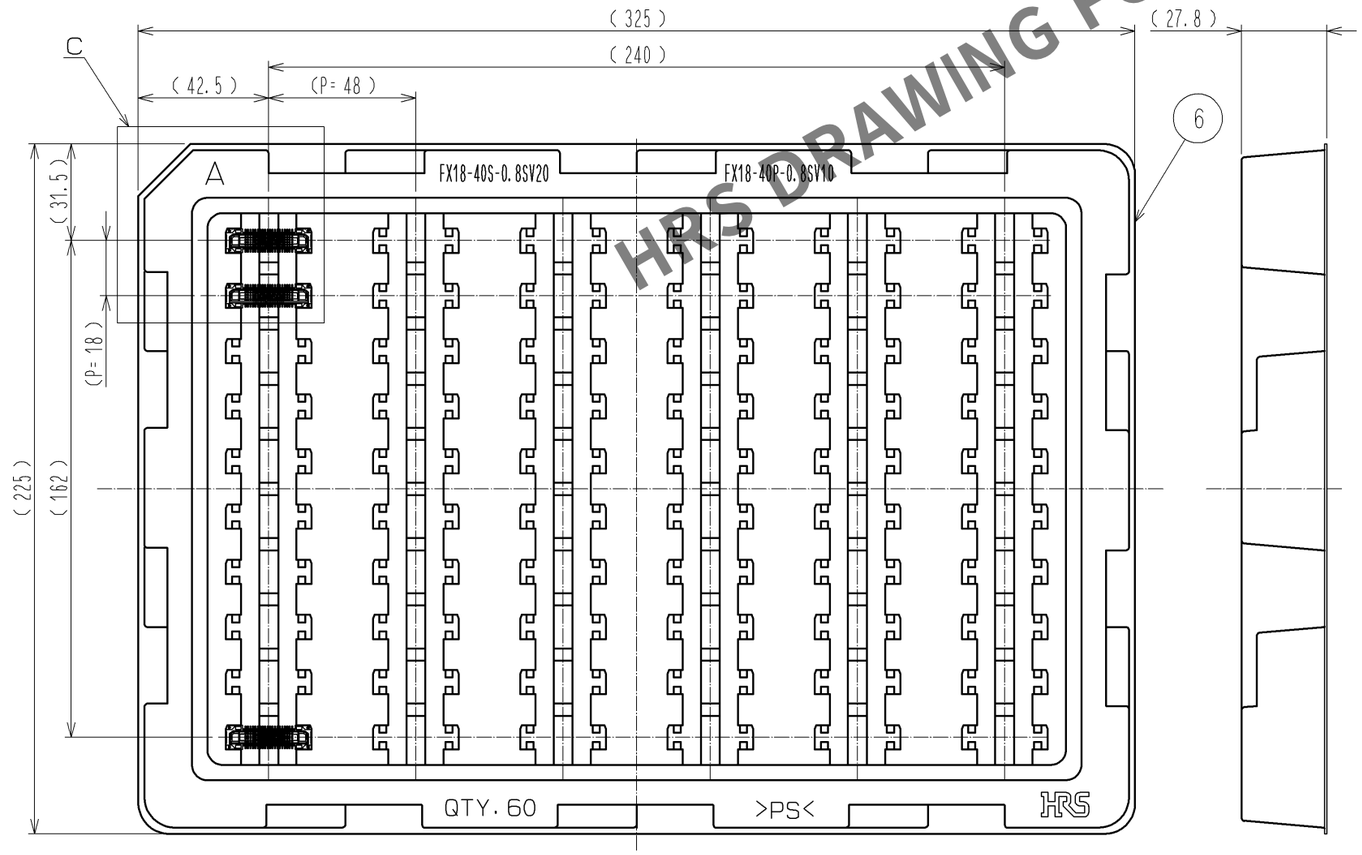

1 8 CONFIGURATION OF MF CONTACT A

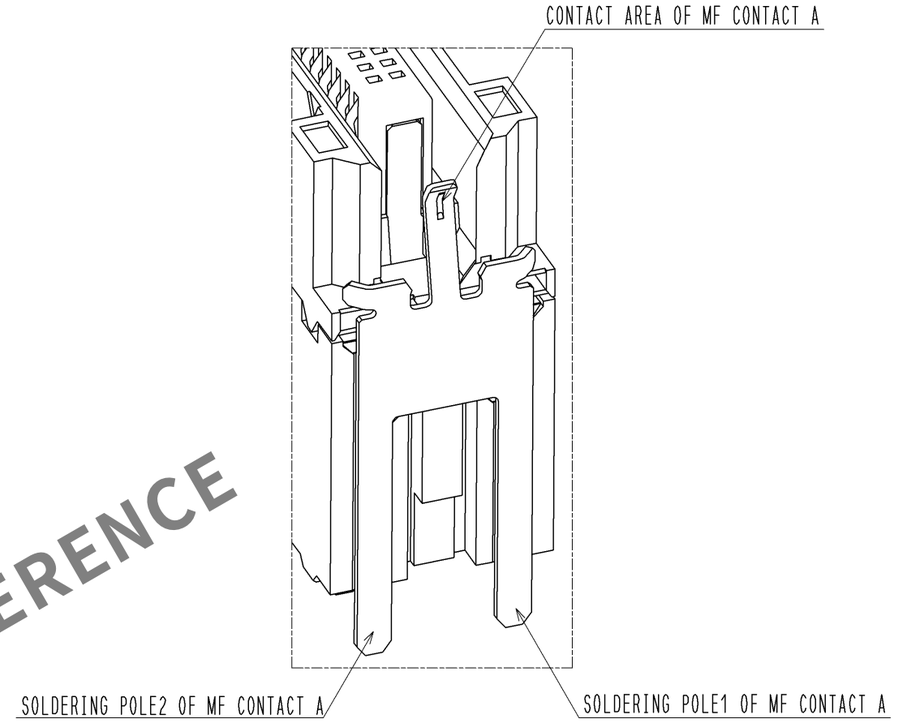

NOTE 8 SOLDERING LEAD OF MF CONTACT A SPLITS INTO TWO POLES.
BE SURE TO CONNECT TO THE SAME CIRCUIT.

C(1:1)

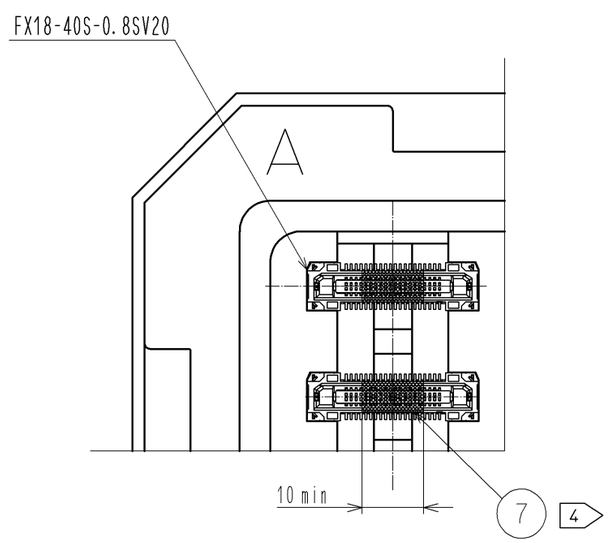

HRS DRAWING FOR REFERENCE

HRS	DRAWING NO.	EDC3-334390-00
	PART NO.	FX18-40S-0.8SV20
	CODE NO.	CL579-0030-0-00

1 2/2

FORM HC0011-5-8