REVISIONS					
REV.	ECN NO.	LOCATION	DESCRIPTION	DATE	DESIGN
A0	N/A		INITIAL RELEASE	/	/
A1	N/A		图面升级整理图面	2025.06.26	阿树

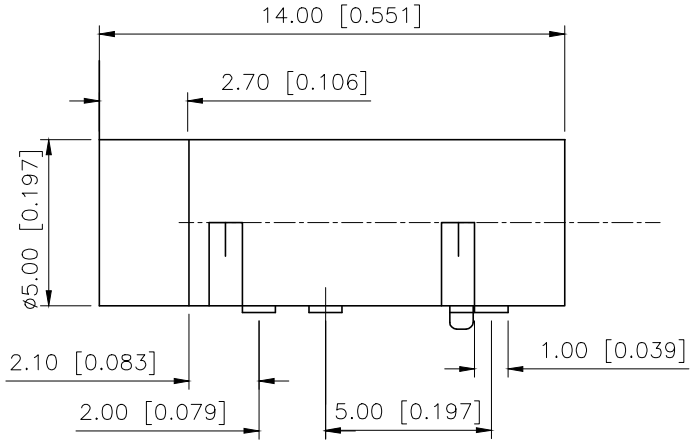

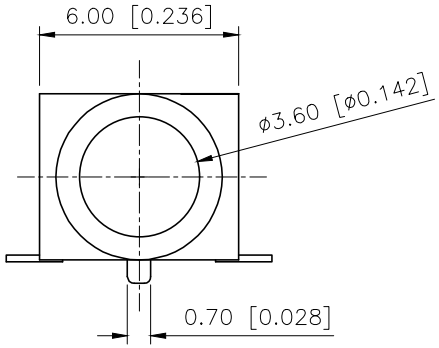

Model No.	PJ-320B-SMT
Schematic	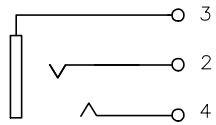

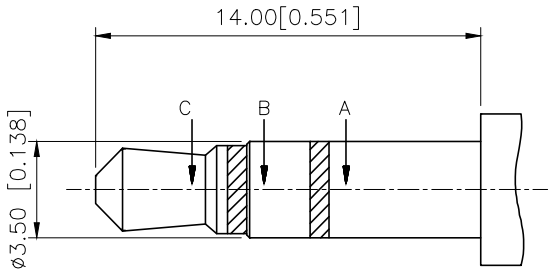

MATE PLUG

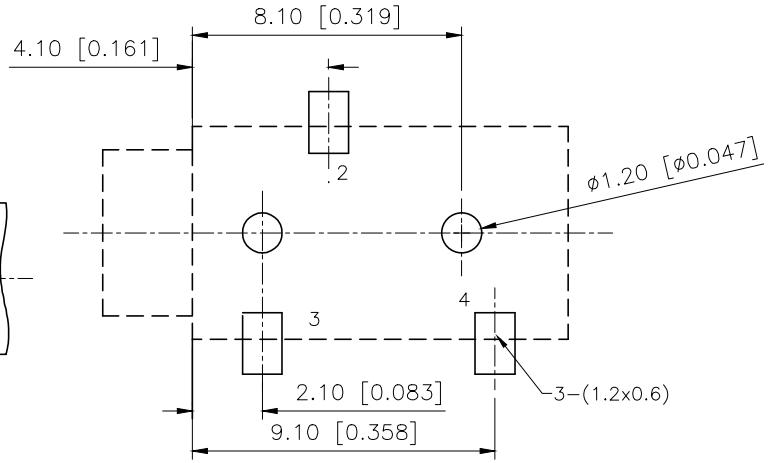

PCB LAYOUT TOP VIEW

PAPT NAMF	MATERIAL	PLATING
Plastic	PA9T	
Terminal	brass	
Terminal	brass	silver
Terminal	copper alloy	silver
Terminal	copper alloy	silver
Terminal	copper alloy	silver
Terminal	copper alloy	silver

AuGLAR	±5°
X.	±0.40
X.x	±0.30
X.xx	±0.20
X.xxx	±0.15
UNSPECIFIED TOLERAuCES	

XKB Connection 星创

DESIGN	阿树	VIEW:	MODEL TYPE: 3.5 PHONE JACK
CHECKED		UNIT: mm/in	PART NO.: PJ-320B-SMT
APPROVED		SIZE: A4	DWG NO.:

XKB INDUSTRIAL PRECISION CO.,LIMITED

SCALE	PAGE	REVISION
N/A	1/1	A1