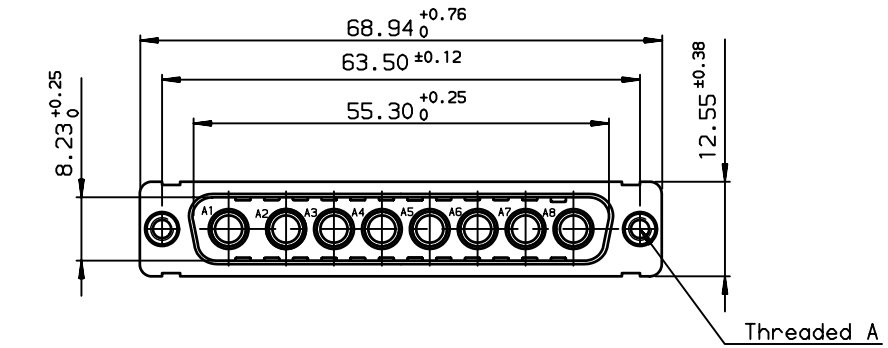


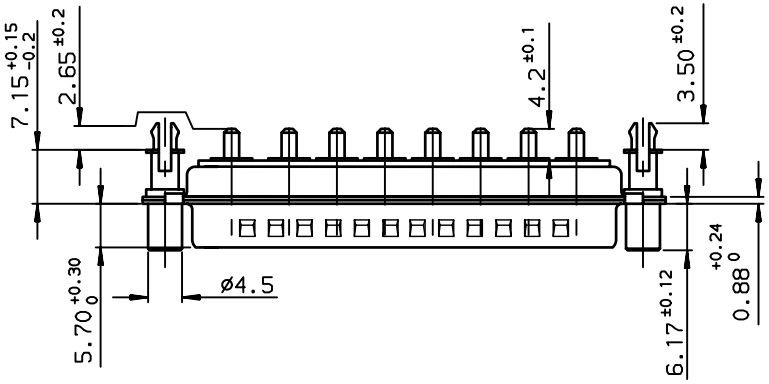


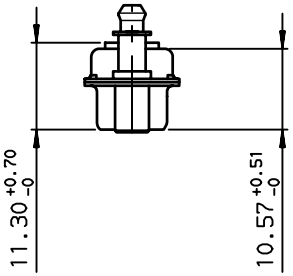


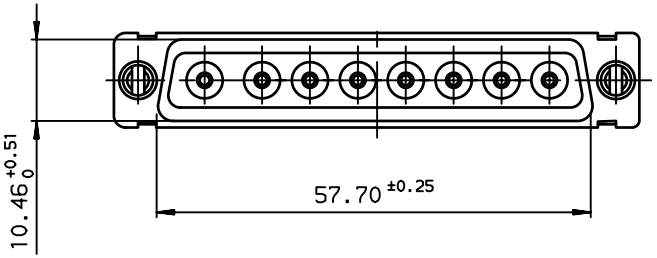


LAYOUT DIMENSIONS (after plating)

CONNECTOR SIDE VIEW

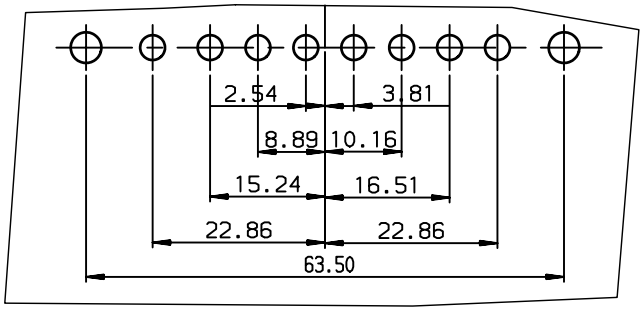


TIN LEAD PART NUMBER

| | |
|---|---|
| DCI8W8P300G30 | M3 |
| DCV8W8P300G30 | UNC 4.40 |
| PART NUMBER | Threaded A |

GENERAL CHARACTERISTICS : SEE DRAWING C01-8639-0001

European Views

| rev | ecn no | dr | date |
|---|---|---|---|
| B | - | DEB | 2003/10/01 |
| C | LS05-001 | MPE | 2005/03/09 |
| D | LS06-0095 | LGO | 2006/06/28 |
| E | LS07-0070 | MPE | 2007/03/06 |
| - | - | - | - |
| - | - | - | - |
| - | - | - | - |

www.fciconnect.com

surface ISO 1302 ✓ | tolerance std ISO 406 ISO 1101

TOLERANCES UNLESS OTHERWISE SPECIFIED

| | | | | | | |
|---|---|---|---|---|---|---|
| Dr | JARRY | 2001/01/25 | ANGULAR | LINEAR | 0.X | ±0.1 |
| Eng | PESSON | 2001/01/25 | | | 0.XX | ±0.1 |
| Chr | LEGARE | 2001/01/25 | 0.XX° ±2° | | 0.XXX | ±0.1 |
| Appr | LEGARE | 2001/01/25 | Product family | | | D-SUB |

projection | mm

size A3 | Scale 1.5

ECN LS07-0070

Spec ref -

title: PIN CONNECTOR FOR POWERS CONTACTS

dwg no: C01-8639-1852 | Rev. E

catalog no -

CUSTOMER | sheet 1 of 1

REV F - 2006-04-17

Copyright FCI.

PDM: Rev:E Rev :E STATUS: Released Released Printed: Dec 13, 2012 Printed: Mar 25 2022