Downloaded from Arrow.com.

DASH NO	CABLES ACCOMODATED	A HEX	ASSEMBLE PER
-003	RG-174, 316	.178	TAI-221
-004	RG-179, 187		
-005	NORTHERN ELECTRIC DBL-SHLD RG-187	.197	
-006	GC875GP1, GRUMMAN DBL-SHLD RG-188		
-007	275-3991, MICRODOT	.178	
-008	RG-195, -180 421-111, ESSEX		
-009	8218, BELDEN 21-597, ESSEX YR23023, BELDEN		
-011	RG-58, RG-141, RG-303	.213	
-013	RG-59	.255	
-013A	TCC-75-2		
-013B	RG-62		TAI-C118
-014	8212, BELDEN		TAI-221
-015	730A, LUCENT	.290	
-015A	RG-71		TAI-C118
-016	724, LUCENT 8281, BELDEN	.324	TAI-221
-017	RG-6	.344	
-018	9268, BELDEN	.255	
-019	8279, BELDEN		
-020	9248, BELDEN	.290	
-022	88241,88269,BELDEN	.255	TAI-C118
-023	89108, BELDEN		TAI-221
-024	89120, BELDEN	.290	
-025	734A, LUCENT	.255	TAI-243
-026	735A, LUCENT	.178	
-026-X			
-027	KS19224L2, LUCENT		TAI-221
-030	32448A, DRAKA	.324	
-054	1725A/B AVAYA	.344	TAI-231

DATA CONTAINED IN THIS DOCUMENT IS PROPRIETARY TO TROMPETER ELECTRONICS INC. AND SHALL NOT BE DISCLOSED, COPIED OR USED FOR PROCUMENT OR MANUFACTURE WITHOUT EXPRESS WRITTEN PERMISSION.

REVISIONS

REV	DESCRIPTIONS	DATE	APPROVED
P	REVISED PER ECO 16946	8/5/09	[illegible]

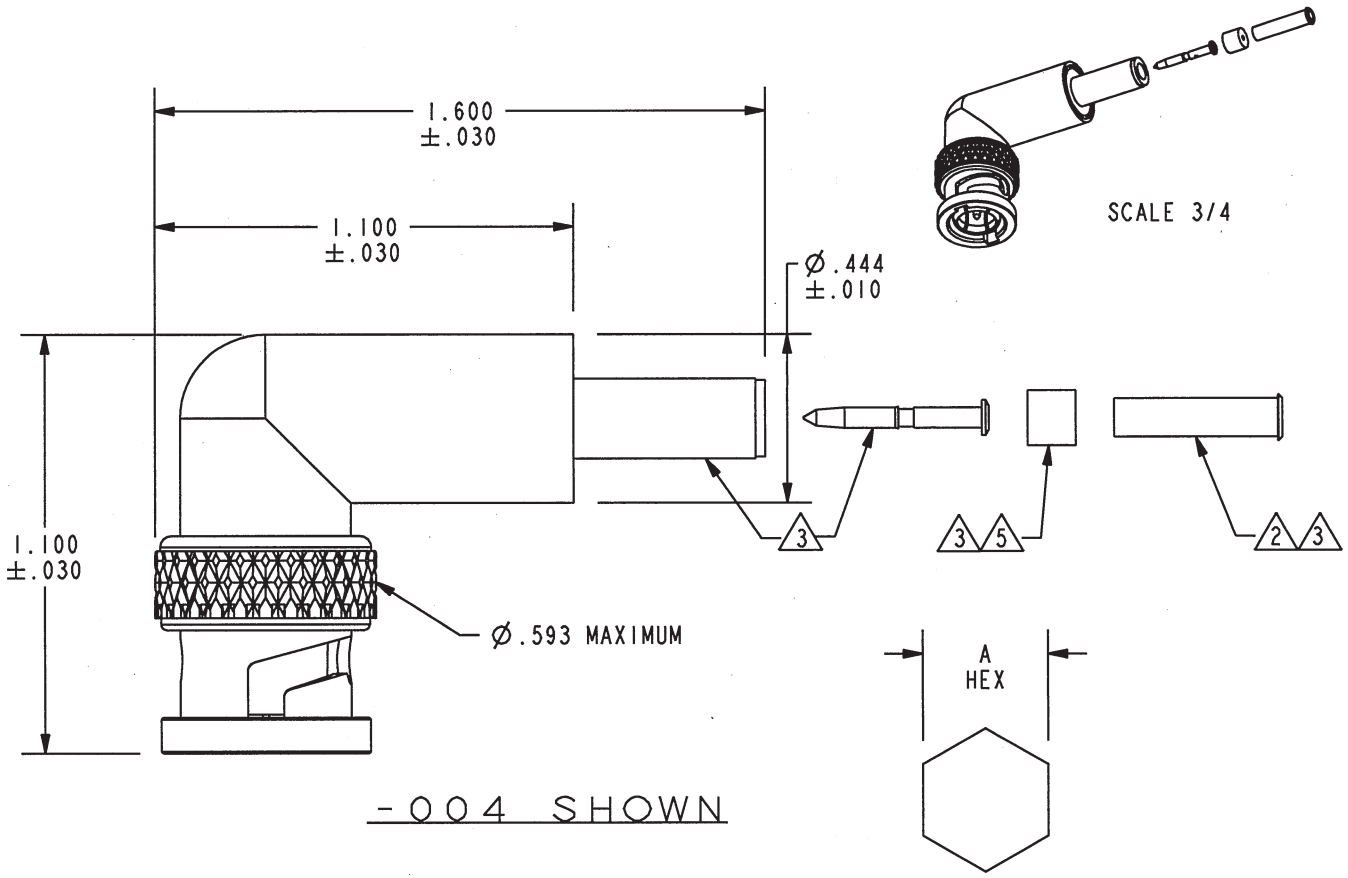

6. EXAMPLE OF COMPLETE MODEL NUMBER:
UPLR220 - 025
BASIC MODEL NUMBER — DASH NUMBER (CABLE GROUP)

5 CONTACT SUPPORT BUSHING REQUIRED -013B, -015A & -022 ONLY

4. RF COAXIAL 75Ω BNC FULL CRIMP RIGHT ANGLE CABLE PLUG

3 PIN, SLEEVE, CRIMP SLEEVE & CONTACT SUPPORT BUSHING ARE SUPPLIED LOOSE

2 SLEEVE REQUIRED ON -003 THRU -007 & -027 ONLY

1. FINISH TFS-1A (NICKEL)

NOTES: UNLESS OTHERWISE SPECIFIED.

RED INDICATES ORIGINAL

INTERPRET DRAWING PER MIL-STD-100. DIMENSIONS ARE IN INCHES AND INCLUDE FINISH THICKNESS UNLESS OTHERWISE SPECIFIED.

TOL: UNLESS SPECIFIED. .XX ± .02 .XXX ± .010 ANGLE ± 1°

DRN L.M. 8-5-09
CHK M.J. 8-5-09
QUALITY
MANUF
APPROVED 8-5-09
PROJ FILE NO. 1-0504

MATERIAL:
FINISH:

NEXT ASSY

DO NOT SCALE DWG

TROMPETER RF connectivity
a cinch connectivity solutions brand

TITLE: UPLR220

SIZE	CAGE CODE	DRAWING NO.	REV.
A	14949	1-0504	P

SCALE	DATE	SHEET
2/1	3-11-94	1C