Jul.1.2024 Copyright 2024 HIROSE ELECTRIC CO., LTD. All Rights Reserved.
In case of consideration for using Automotive equipment / device which demand high reliability, kindly contact our sales window correspondents.

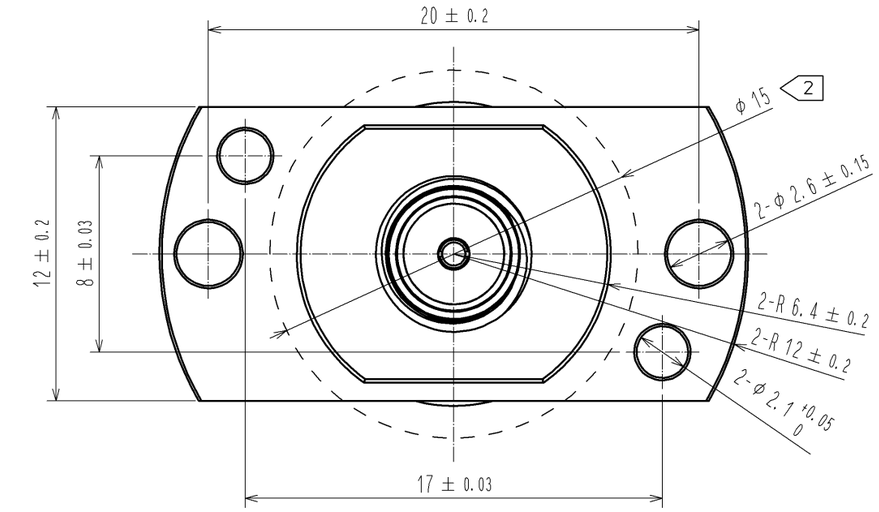

Stroke - Spring reaction force

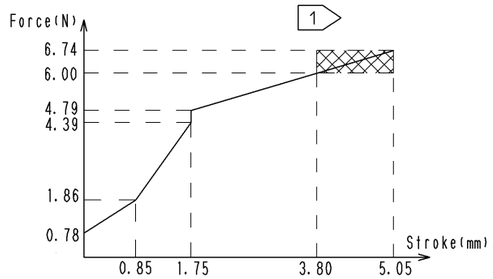

MATED CONDITION

(MAX LOAD POSITION)

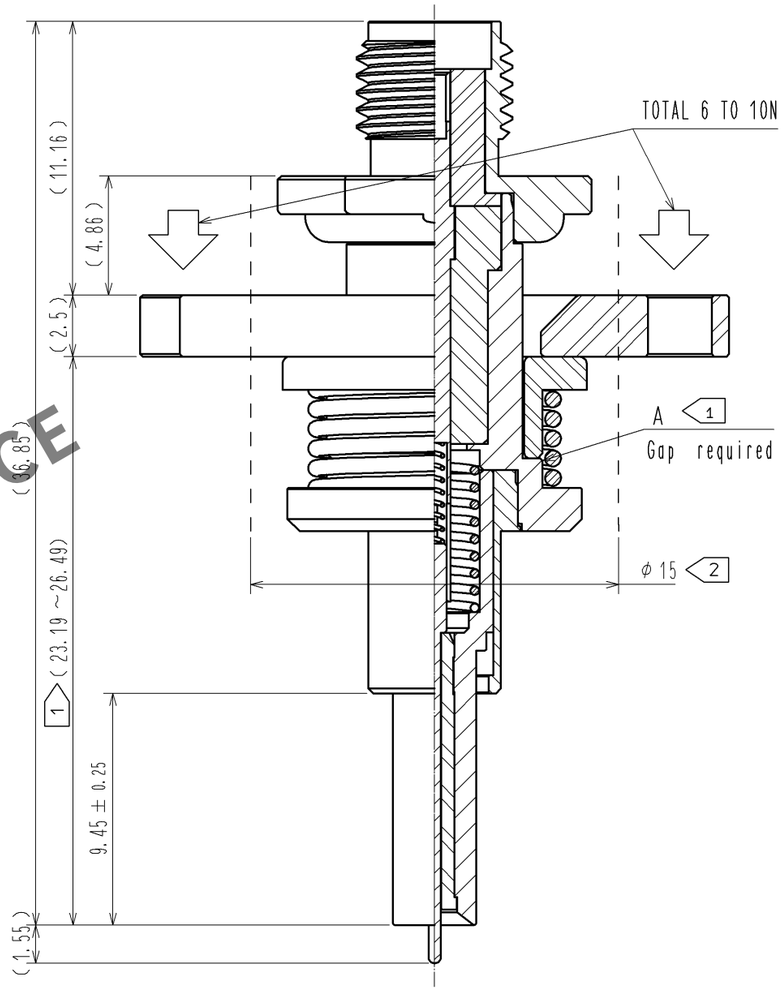

UNMATED CONDITION

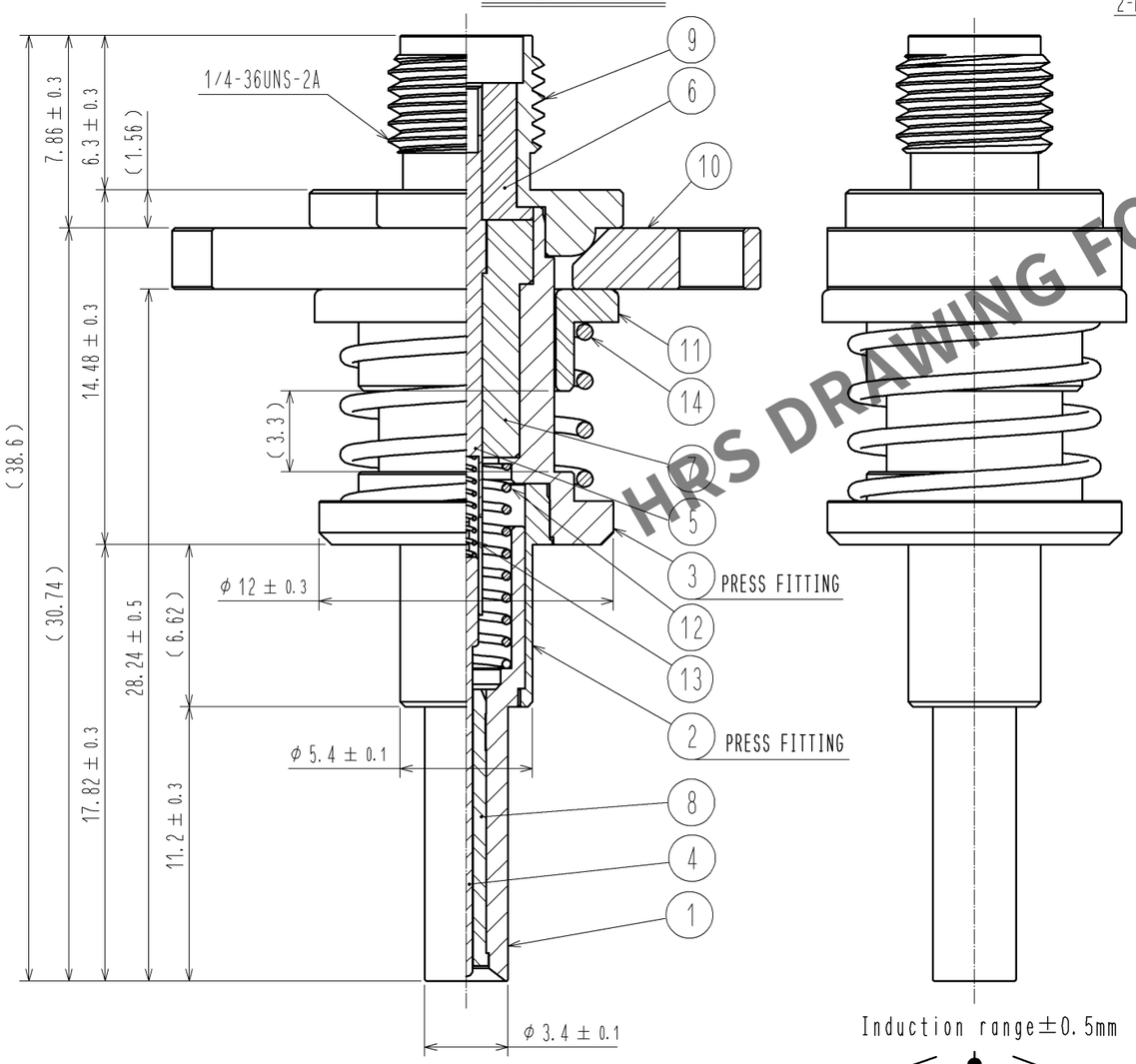

Induction range±0.5mm

Hole layout
for test fixture

Scale (2:1)

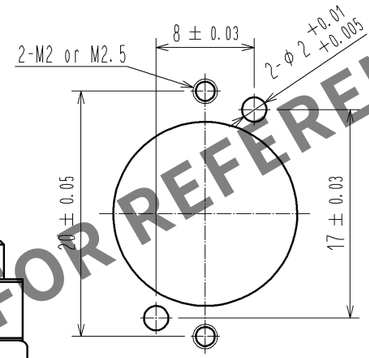

Dowel pins : MS Series
(Misumi Corporaton)

HRS DRAWING FOR REFERENCE

Note 1 After the vertical mating of the adapter (MS-156-HRMJ-29) and the receptacle(MS-156C) is completed. adjust the fixture stop and the load force to within 6 to 10N.

2 No obstacle's in this area to avoid the interference when floating.

NO.	MATERIAL	FINISH , REMARKS	NO.	MATERIAL	FINISH , REMARKS
7	PTFE		14	STAINLESS STEEL	
6	PTFE		13	STAINLESS STEEL	GOLD PLATING
5	BERYLLIUM COPPER	GOLD PLATING	12	STAINLESS STEEL	
4	BERYLLIUM COPPER	GOLD PLATING	11	POLYACETAL	
3	BERYLLIUM COPPER	GOLD PLATING	10	POLYACETAL	
2	BERYLLIUM COPPER	NICKEL PLATING	9	STAINLESS STEEL	
1	BERYLLIUM COPPER	GOLD PLATING	8	PTFE	

UNITS	SCALE	COUNT	DESCRIPTION OF REVISIONS	DESIGNED	CHECKED	DATE
mm	4 : 1					

HIROSE ELECTRIC CO., LTD.

APPROVED	: KY. SHIMIZU	10. 02. 02	DRAWING NO.	EDC3-180963-00
CHECED	: TY. OZAKI	10. 01. 29	PART NO.	MS-156-HRMJ-29
DESIGNED	: TO. KATAYAMA	10. 01. 29		
DRAWN	: TO. KATAYAMA	10. 01. 29	CODE NO.	CL358-0295-8-00 △ 1/1

FORM HC0011-5-7_AN