REVISIONS					
REV.	ECN NO.	LOCATION	DESCRIPTION	DATE	DESIGN
A0	N/A		INITIAL RELEASE	/	/
A1	N/A		图面升级整理图面	2025.06.16	阿树

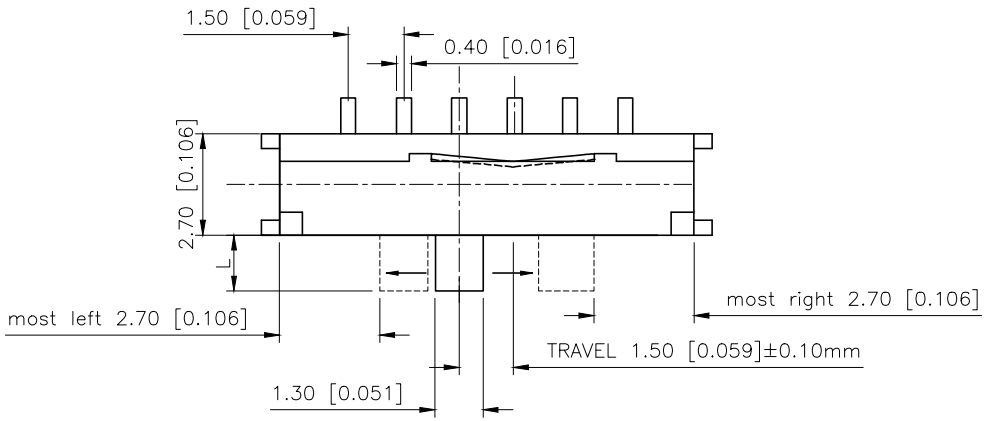

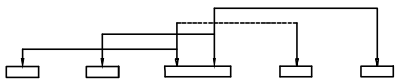

SCHEMATIC

NOTE:
Rating: DC 12V 50mA
Operating Force:200±100gf
Lifetime:10,000 Cycles

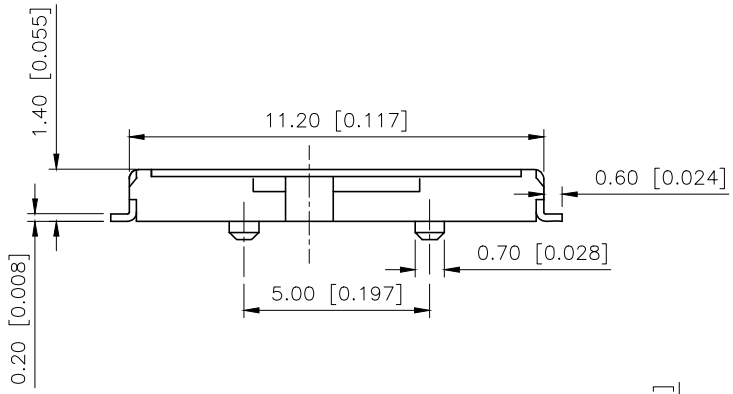

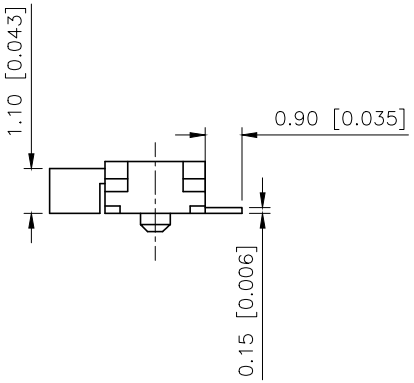

PAPT NO	L
SK-1500-L1	1.50
SK-1500-L2	2.00
SK-1500-L3	2.50

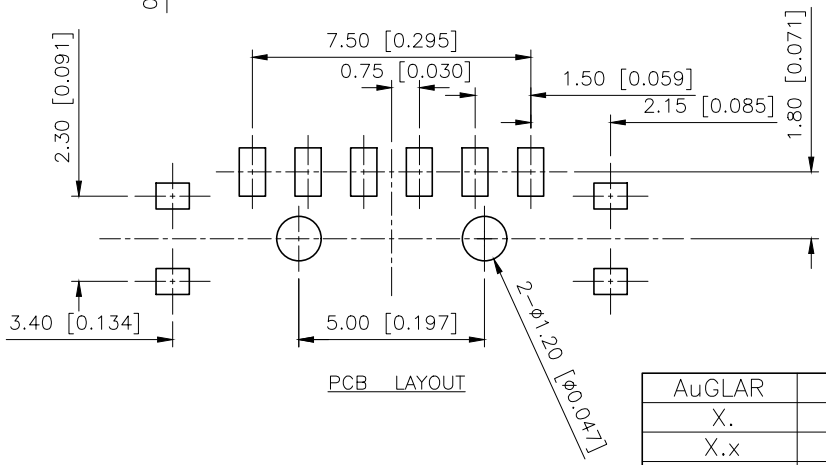

PCB LAYOUT

ITEM	PAPT NAME	QTY	MATERIAL	FINISHING
5	Terminal	6	Brass(0.30t)	ag Plated
4	Contact spring	1	Phosphor branze	ag Plated
3	Base	1	LCP	Black
2	Cover	1	Sus	Natural
1	Keystake	1	PA46	Black

AuGLAR	±5°
X.	±0.40
X.x	±0.30
X.xx	±0.20
X.xxx	±0.15
UNSPECIFIED TOLERAuCES	

XKB Connection 星坤

DESIGN	阿树	VIEW:	MODEL TYPE: SLIDE SWITCH
CHECKED		UNIT: mm/in	PART NO.: SK-1500-X
APPROVED		SIZE: A4	DWG NO.:

XKB INDUSTRIAL PRECISION CO.,LIMITED

SCALE	PAGE	REVISION
N/A	1/1	A1