Jun.1.2024 Copyright 2024 HIROSE ELECTRIC CO., LTD. All Rights Reserved.
In case of consideration for using Automotive equipment / device which demand high reliability, kindly contact our sales window correspondents.

	COUNT	DESCRIPTION OF REVISIONS	BY	CHKD	DATE		COUNT	DESCRIPTION OF REVISIONS	BY	CHKD	DATE
1	3	RE-F-06374	J.M	M.I	99.05.15						. .
2	3	RE-F-06522	J.M	M.I	99.9.7						. .
					. .						. .

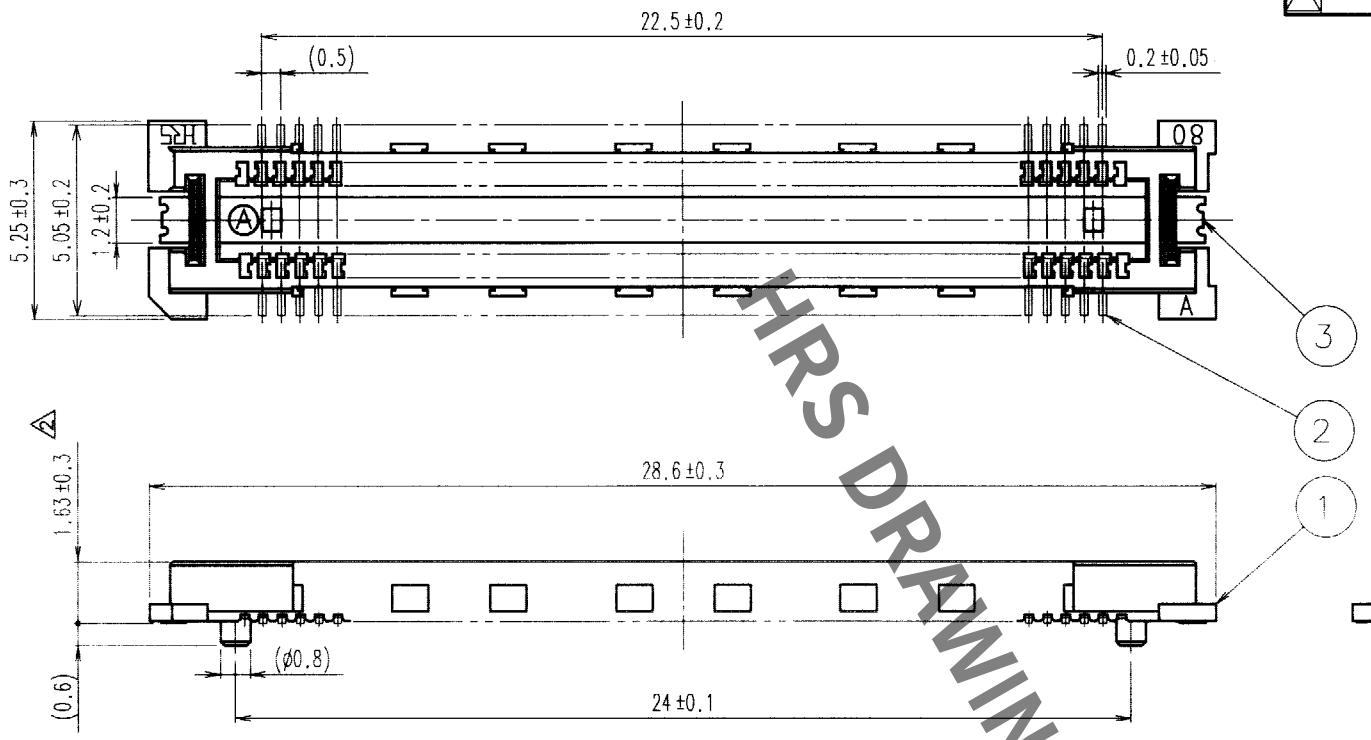

2 (REVISED CONFIGURATION)

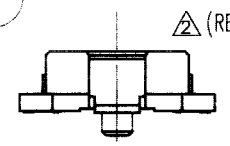

RECOMMENDED LAND PATTERN DIMENSION OF PCB

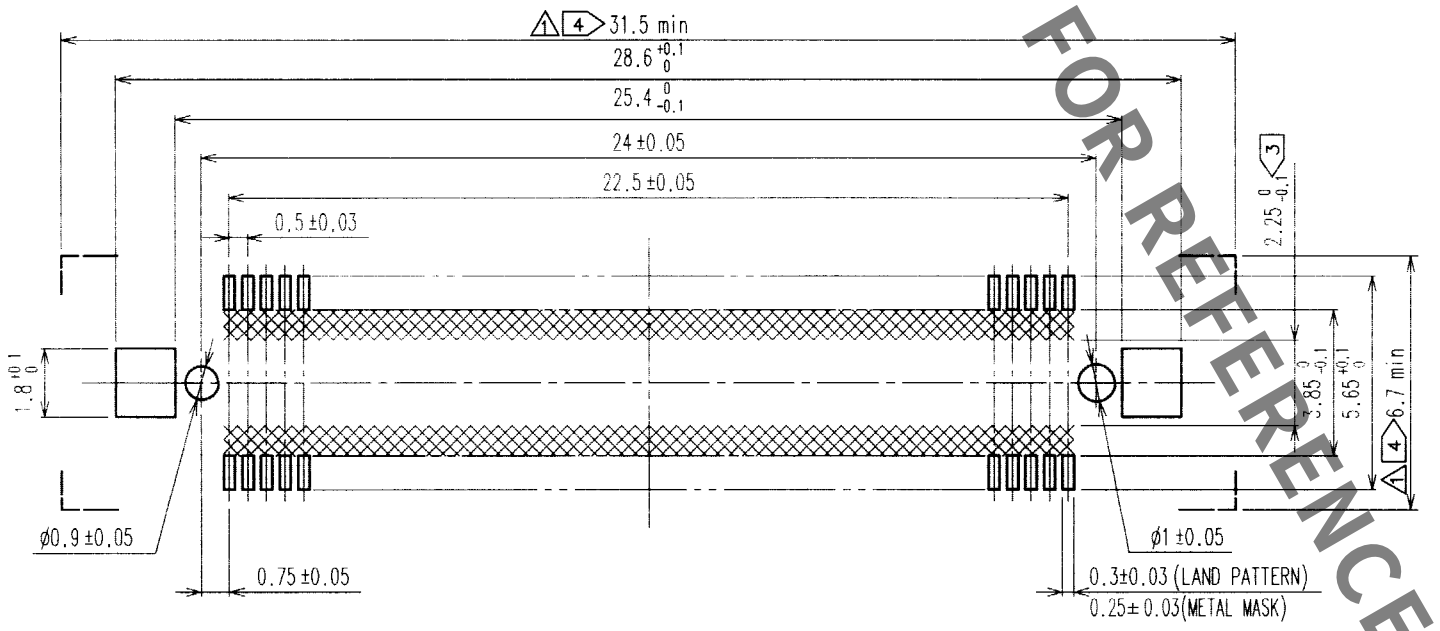

2 SIGNAL PORTION CROSS SECTION (10:1)

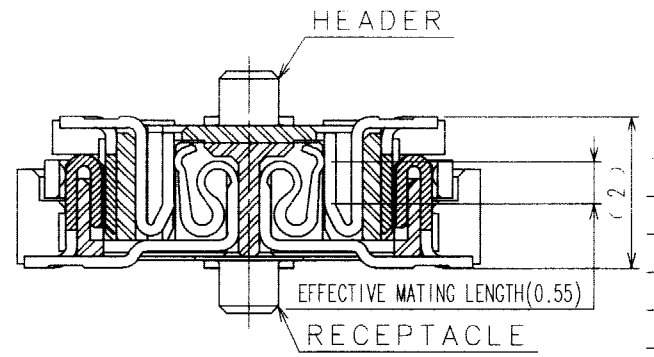

HRS DRAWING FOR REFERENCE

NO.	MATERIAL	FINISH, REMARKS	NO.	MATERIAL	FINISH, REMARKS
2	COPPER ALLOY	CONTACT AREA:GOLD (0.1μm) OVER NICKEL LEAD:GOLD FLASH OVER NICKEL			
1	LCP	BEIGE UL94V-0	3	PHOSPHOR BRONZE	TIN PLATED

CODE NO. (OLD)	DRAWN	DESIGNED	CHECKED	APPROVED	RELEASED
CL	J.Matsukawa 990212	J.Matsukawa 990212	Y.Yoshimura 990212	Y.Yoshimura 990212	

NOTES
1. SMT LEAD-COPLANARITY:0.1 MAX.
2. THIS PRODUCT HAS NO POLARITY TO PATTERN FOR MOUNTING.
3. MAKE SURE WIDTH OF PATTERN IS WITHIN THAT OF LAND ,OR LEAD MAY TOUCH PATTERN. (THIS APPLIES TO HATCHED AREA.)
4. DO NOT MOUNT OTHER DEVICES ONTO [ ] AREA ,OR MATING PAIR CANNOT BE MATED.

TO
PCK

SCALE 5 : 1
UNITS mm

DRAWING NO. EDC3-152101

HRS HIROSE ELECTRIC CO.,LTD.

PART NO. FX11LA-92P-SV

CODE NO. CL573-0043-4

1/1

FORM NO.229