ISL Products International

ø12mm Spur Gear Motor
Carbon - Brushed
MOT-KM NJSC-12-A

Our Spur Gear Motors are an inline solution providing ample torque output at various speeds. They are best for intermittent duty operation. With endless performance combinations, we have a fully tailored gear motor solution for you.

Contact Us for alternative solutions!

Specifications

Gearhead Type:	Spur	**No-Load Speed:**	132 rpm *(+/- 10%)*
Motor Type:	Carbon - Brushed	**No-Load Current:**	< 45mA
Rated Voltage:	5V DC	**Stall Torque:**	1,294 g.cm
Rated Speed:	106 rpm	**Stall Current:**	550 mA
Rated Torque:	250 g.cm	**Max. Power:**	0.44 W
Rated Current:	130 mA	**Termination Styles:**	Terminals

Dimensions

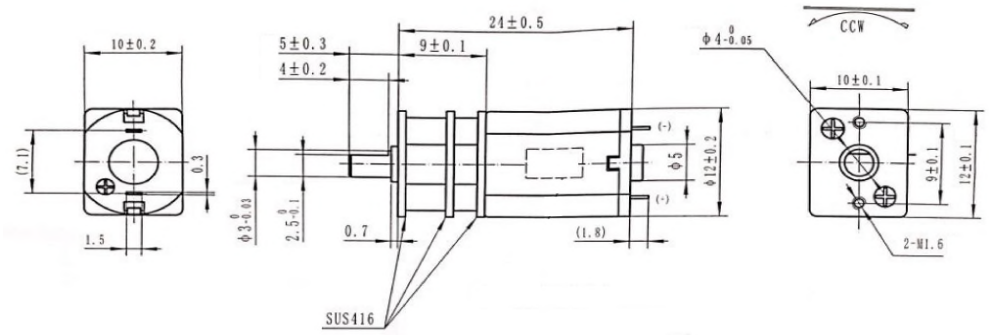

units: mm

Performance Curve

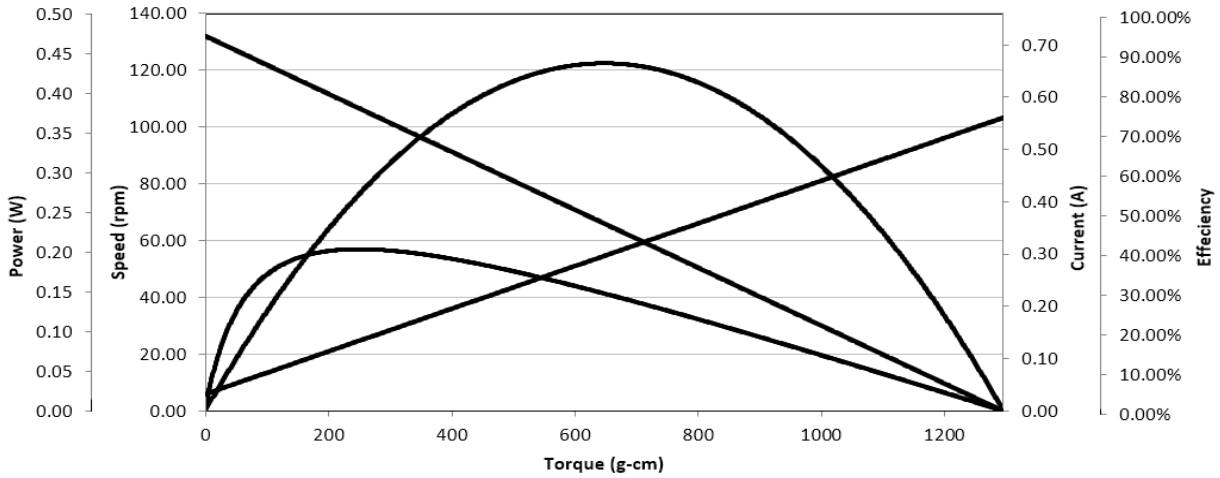

© 2020 ISL Products International Ltd. Specifications subject to change without notice.