THIS DRAWING IS UNPUBLISHED. RELEASED FOR PUBLICATION 20
© COPYRIGHT 20 BY - ALL RIGHTS RESERVED.

REVISIONS

P	LTR	DESCRIPTION	DATE	DWN	APVD
	1	B SAMPLE	25SEP2017	A.D	I.Y
	A	RELEASE	06AUG2018	A.D	SY.W
	A1	ECR-18-010243	07SEP2018	A.D	SY.W
	B	ECR-19-002169	25DEC2018	A.D	I.Y

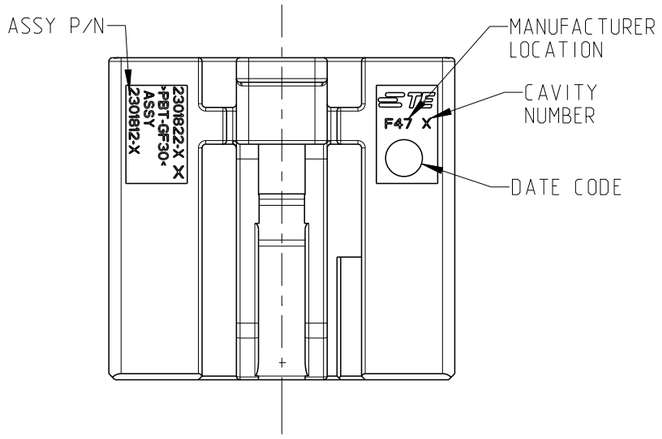

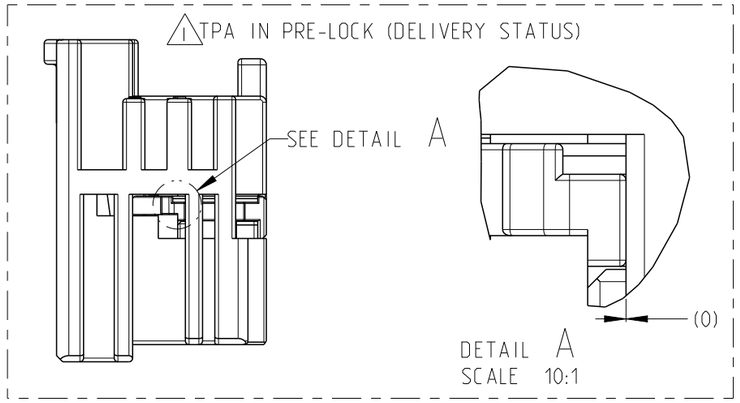

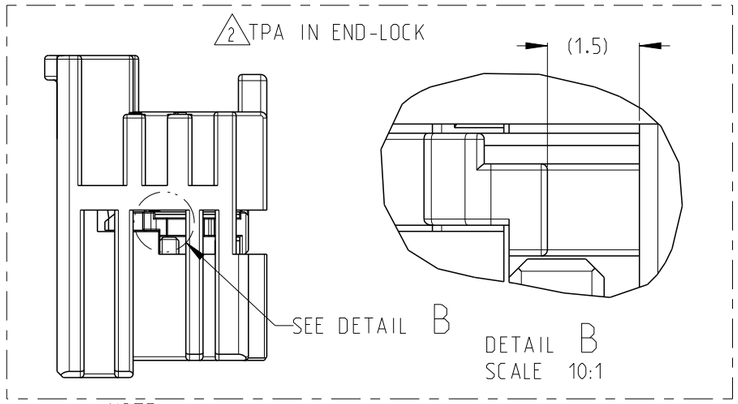

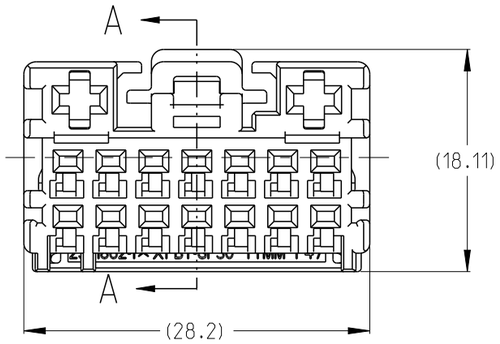

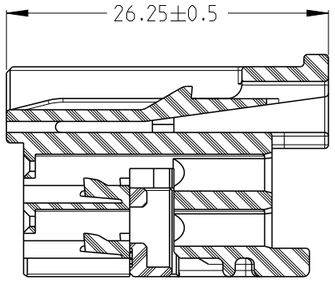

SECTION A-A

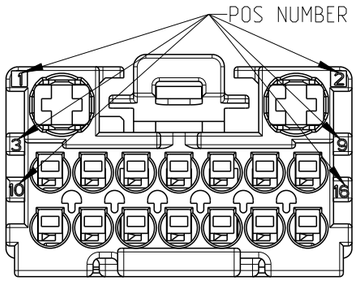

NOTE:

1. TPA IN PRE-LOCK STATUS WHEN DELIVERY.
2. TPA IN END-LOCK AFTER CONTACT ASSEMBLY.
3. PRODUCT SPEC 108-101579.
4. MATING PART IS *-2316757-* .
5. APPLICABLE CONTACT AND WIRE SIZE ,SEE BELOW:

CONTACT SIZE(MM)	WIRE SIZE(MM2)	INSULATION DIA(MM)	CONTACT	PLATING
1.2	0.22-0.35	1.1-1.4	2296537-1	PRE-TIN
	0.5-0.75	1.4-1.9	2296537-2	PRE-TIN
	1.0-1.5	1.9-2.4	2296537-3	PRE-TIN
2.8	0.5-1.0	1.4-2.1	1241388-1	PRE-TIN
	>1.0-2.5	2.2-3.0	1241390-1	PRE-TIN
	>2.5-4.0	2.7-3.7	1-968853-1	PRE-TIN

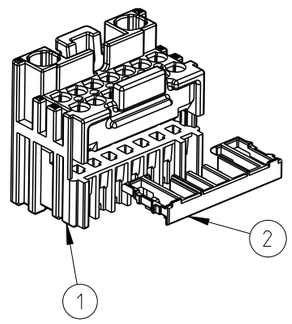

1	1	NATURE	PBT-GF30	TPA REC HSG,16POS,HYBRID	2
1		YELLOW (B)	PBT-GF30	16POS,HYBRID,REC HSG,UNSLD,COD B	1
	1	BLACK	PBT-GF30	16POS,HYBRID,REC HSG UNSLD,CODA	
QTY	QTY	COLOR	MATERIAL	DESCRIBE	NO
7.52	7.52	WEIGHT(g)			
B	A	CODING			
B	B	REV			
2301812-2	2301812-1	ASSY P/N			

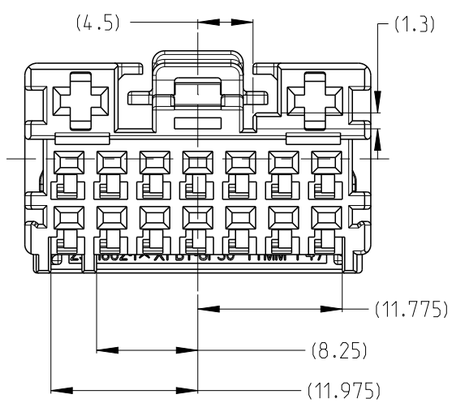

2301812-1
CODING A
BLACK

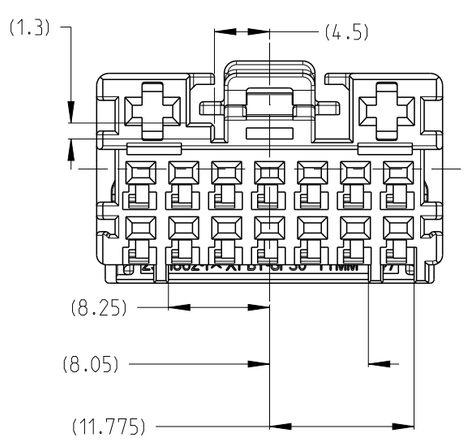

2301812-2
CODING B
YELLOW
(B)

THIS DRAWING IS A CONTROLLED DOCUMENT.

DIMENSIONS: mm

TOLERANCES UNLESS OTHERWISE SPECIFIED:

~~0 PLC~~	~~±~~
~~1 PLC~~	~~±0.1~~
~~2 PLC~~	~~±0.01~~
~~3 PLC~~	~~±0.001~~
~~4 PLC~~	~~±0.0001~~
~~ANGLES~~	~~±~~

MATERIAL: SEE TABLE -

FINISH: - ~~finish_spec_2~~

DWN	A.DANG	25SEP2017
CHK	E.JIANG	25SEP2017
APVD	I.YIN	25SEP2017

PRODUCT SPEC: 108-101579

APPLICATION SPEC: 114-101077

WEIGHT: -

TE Connectivity

NAME: UNSEAL INLINE 16WAY REC ASSY

-

SIZE	CAGE CODE	DRAWING NO	RESTRICTED TO
A3	00779	C-2301812	-

CUSTOMER DRAWING | SCALE 2:1 | SHEET 1 OF 1 | REV B