8 POLE

M12 MALE

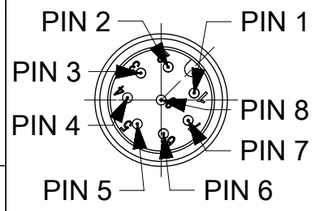

PIN	WIRE COLOR	PIN	WIRE COLOR
1	WH	5	GY
2	BN	6	PK
3	GN	7	BU
4	YE	8	RD

12 POLE

M12 MALE

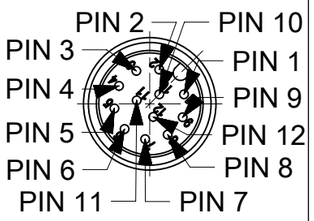

PIN	WIRE COLOR	PIN	WIRE COLOR
1	WH	7	BU
2	BN	8	RD
3	GN	9	BK
4	YE	10	VT
5	GY	11	GY/PK
6	PK	12	RD/BU

PART No MATRIX

Y	0	X	0	0	6	X	X	X	X	X	X	X	X	X

OPTIONS

Y0= ULTRA LOCK 2.0
SINGLE ENDED

POLES:
8 = 8 POLES
C = 12 POLES

HEADER:
006= MALE STR

CABLE:
E02 - 8x0.25 PVC BLACK
B41 - 8x0.25 WSOR BLACK
H08 - 8x0.25 PUR-LS0H BLACK
H45 - 12x0.14 PUR BLACK

UNIT:
M = METER
F = FEET
C = CENTIMETER
T = 10M

LENGTH:
EXAMPLE:
010 = 1 m
050 = 5 m
100 = 10 m

OVERMOLD:
BLANK = STANDARD BRAD:
-YELLOW IN THE USA
-BLACK IN EUROPE
A = GREY
E = RED
G = BLACK
Y = YELLOW
H = STD. COLOUR WITH TWO
ID-TAG CARRIERS

8 POLE SHOWN

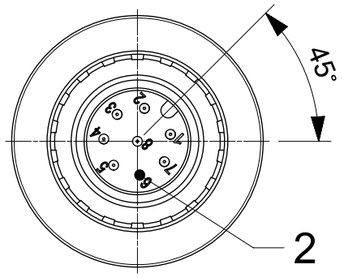

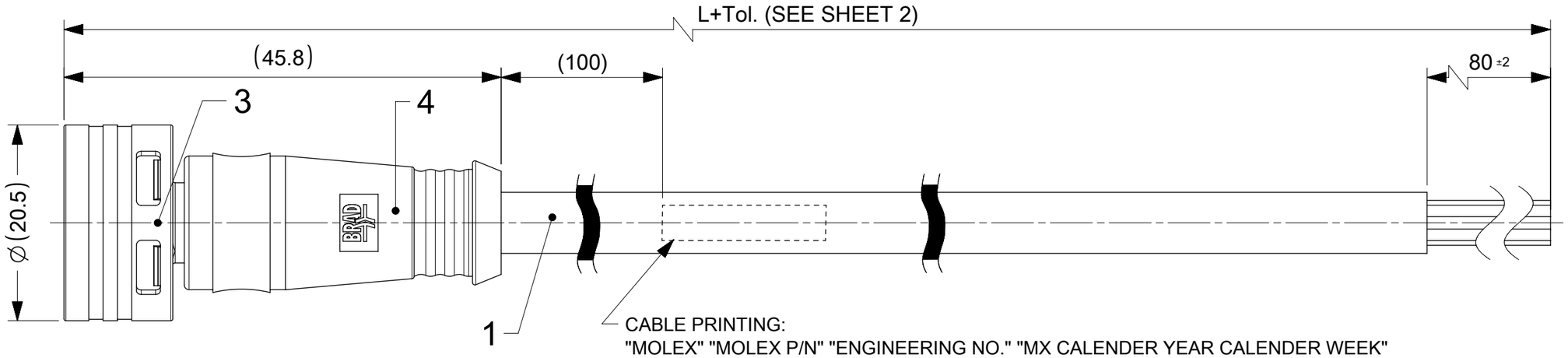

CABLE PRINTING:
"MOLEX" "MOLEX P/N" "ENGINEERING NO." "MX CALENDER YEAR CALENDER WEEK"
SECOND PRINT 300mm. AWAY

FOR EXAMPLE: MOLEX 1204000061 Y05006E03M010 MX2038

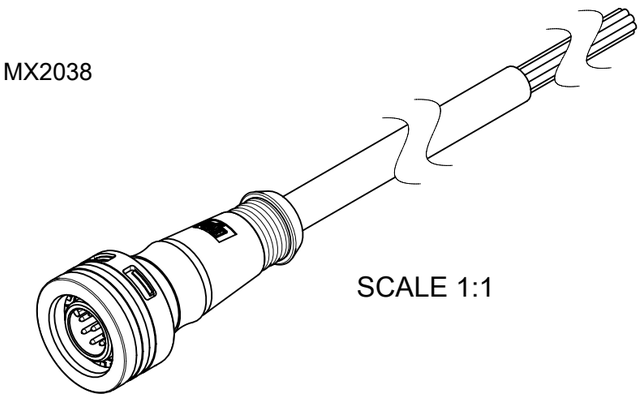

SCALE 1:1

NOTES:

1. PARTS ACC. TO PRODUCT SPECIFICATION 1204000001 PS P10 AND IN STYLE OF IEC-61076-2-010
2. BOM & PART LIST - SEE SHEET 2
3. RATED VOLTAGE :
   8, 12 CONTACTS: 30V AC OR DC
   RATED CURRENT:
   8 CONTACTS: 2A
   12 CONTACTS: 1.5A,
   DERATING HAS TO BE CONSIDERED
   OVERVOLTAGE CATEGORY: 3
   POLLUTION DEGREE: 3, ONLY IN MATED AND LOCKED CONDITION
4. PROTECTION CLASS: IP 67, ONLY IN MATED AND LOCKED CONDITION
5. TEMPERATURE RANGE:
   TEMPERATURE PLUG/SOCKET: -40 °C TO +85 °C
   TEMPERATURE CABLE: SEE CABLE LIST
6. MECHANICAL OPERATIONS: 100 CYCLES
7. MATES WITH ULTRA-LOCK M12 FEMALE RECEPTACLES
8. PACKAGING: THE CORDSETS ARE SINGLE PACKED IN PLASTIC BAGS AND DELIVERED IN CARTON BOXES
9. UL CSA FILE REGISTRATION PENDING

DOCUMENT STATUS	P1	RELEASE DATE	2023/01/31 08:21:31

THIS DRAWING CONTAINS INFORMATION THAT IS PROPRIETARY TO MOLEX ELECTRONIC TECHNOLOGIES, LLC AND SHOULD NOT BE USED WITHOUT WRITTEN PERMISSION

FUNCTIONAL SYMBOLS: FA = 0, FC = 0, FP = 0
DIVISIONAL SYMBOLS

DIMENSION UNITS	SCALE
mm	2:1

GENERAL TOLERANCES (UNLESS SPECIFIED)

ANGULAR TOL	±	1.0 °
4 PLACES	±	
3 PLACES	±	
2 PLACES	±	0.05
1 PLACE	±	0.3
0 PLACES	±	0.5

DRAFT WHERE APPLICABLE MUST REMAIN WITHIN DIMENSIONS

CURRENT REV DESC: NOTES AND CABLE LIST UPDATED

EC NO: 736602
DRWN: RSCHIEBER 2023/01/24
CHK'D: RSILLER 2023/01/31
APPR: RSILLER 2023/01/31

INITIAL REVISION:
DRWN: JELIZAINCIN 2021/01/14
APPR: RSILLER 2022/10/14

THIRD ANGLE PROJECTION | DRAWING: A3-SIZE | SERIES: 120400

molex

CSE U12 8-12P AC MA STR XM SE UNSH BK

PRODUCT CUSTOMER DRAWING

DOCUMENT NUMBER	DOC TYPE	DOC PART	REVISION
1204000116	PSD	000	A1

MATERIAL NUMBER	CUSTOMER	SHEET NUMBER
SEE SHEET 2	GENERAL MARKET	1 OF 2

FORMAT: master-Series-A3
REVISION: J
DATE: 2020/01/15

PART LIST

MOLEX NO.	ENGINEERING NO.	LENGHT (MM)
1204000116	Y08006E02M010	1000
1204000117	Y08006E02M020	2000
1204000118	Y08006E02M050	5000
1204000119	Y08006E02M100	10000
1204000120	Y08006B41M010	1000
1204000121	Y08006B41M020	2000
1204000122	Y08006B41M050	5000
1204000123	Y08006B41M100	10000
1204000124	Y08006H08M010	1000
1204000125	Y08006H08M020	2000
1204000126	Y08006H08M050	5000
1204000127	Y08006H08M100	10000
1204000128	Y0C006H45M010	1000
1204000129	Y0C006H45M020	2000
1204000130	Y0C006H45M050	5000
1204000131	Y0C006H45M100	10000

MOLEX NO.	ENGINEERING NO.	LENGHT (MM)

MOLEX NO.	ENGINEERING NO.	LENGHT (MM)

CABLE LIST

8P	12P	CABLE TYPE	DESCRIPTION	MATERIAL	FINISH/COLOR	FIXED INSTALLATION *		FLEXIBLE INSTALLATION **		DRAG CHAIN	
						MIN.	MAX.	MIN.	MAX.	MIN.	MAX.
X		E02	8X0.25MM;UNSHLD;PVC;BK;OD=6.60MM	PVC	BLACK	-30°C	+80°C	-10°C	+80°C	NOT SUITABLE	
X		B41	CABLE 8X0.25 TPU BK D6.40 TPE UNSH DCS	PUR WSOR	BLACK	-40°C	+90°C	-25°C	+80°C	-5°C	+60°C
X		H08	CABLE PUR;BLK 8X0.25MM-LSOH;UL OD=6.10	PUR-LS0H	BLACK	-40°C	+80°C	-25°C	+80°C	+5°C	+60°C
	X	H45	CABLE12X0.14BLK PUR D6.0 UL/CSA	PUR	BLACK	-40°C	+80°C	-25°C	+80°C	+5°C	+60°C

* FIXED POSITION WITHOUT ACCIDENTAL CRUSHING OF VIBRATION.
** FREE MOTION WITHOUT PERIODIC RECURRENCE OR FORCED GUIDANCE.

CABLE LENGTH TOLERANCES	
LENGTH	TOLERANCE
0m-1m	+40 mm
>1m-5m	+60 mm
>5m-10m	+80 mm
>10m-20m	+140 mm
>20m-30m	+160 mm
>30m	+1% length

BILL OF MATERIAL:

8P	12P	ITEM	QTY	DESCRIPTION	MATERIAL	FINISH/COLOR
X	X	1	-	CABLE	SEE CABLE LIST	SEE CABLE LIST
X		2	8	CONTACT 8 MA TUR AU	BRASS	GOLD OVER NICKEL PLATED
	X		12	CONTACT 06 MA TUR AU		
X		3	1	PLG U12 8P AC MA PA UNSH WT	-	-
	X			PLG U12 12P AC MA PA UNSH WT		
X	X	4	1	OVERMOLD	TPC	SEE MATRIX
IF "H" IS IN MATRIX-END		-	2	I/D CARRIER DIA 4-7MMX30MM	PVC	TRANSPARENT

DOCUMENT STATUS	P1	RELEASE DATE	2023/01/31 08:21:31

FUNCTIONAL SYMBOLS: FA = 0, FC = 0, FD = 0
DIVISIONAL SYMBOLS

THIS DRAWING CONTAINS INFORMATION THAT IS PROPRIETARY TO MOLEX ELECTRONIC TECHNOLOGIES, LLC AND SHOULD NOT BE USED WITHOUT WRITTEN PERMISSION

DIMENSION UNITS	SCALE
mm	1:1

GENERAL TOLERANCES (UNLESS SPECIFIED)

ANGULAR TOL	±	1.0 °
4 PLACES	±	
3 PLACES	±	
2 PLACES	±	0.05
1 PLACE	±	0.3
0 PLACES	±	0.5

DRAFT WHERE APPLICABLE MUST REMAIN WITHIN DIMENSIONS

CURRENT REV DESC: NOTES AND CABLE LIST UPDATED

EC NO: 736602
DRWN: RSCHIEBER 2023/01/24
CHK'D: RSILLER 2023/01/31
APPR: RSILLER 2023/01/31

INITIAL REVISION:
DRWN: JELIZAINCIN 2021/01/14
APPR: RSILLER 2022/10/14

THIRD ANGLE PROJECTION | DRAWING: A3-SIZE | SERIES: 120400

molex

CSE U12 8-12P AC MA STR XM SE UNSH BK

PRODUCT CUSTOMER DRAWING

DOCUMENT NUMBER	DOC TYPE	DOC PART	REVISION
1204000116	PSD	000	A1

MATERIAL NUMBER	CUSTOMER	SHEET NUMBER
SEE PART LIST	GENERAL MARKET	2 OF 2

FORMAT: master_Sealed-A3
REVISION: J
DATE: 2020/01/14