Supply Module 24 V DC / 230 V AC/DC

passive

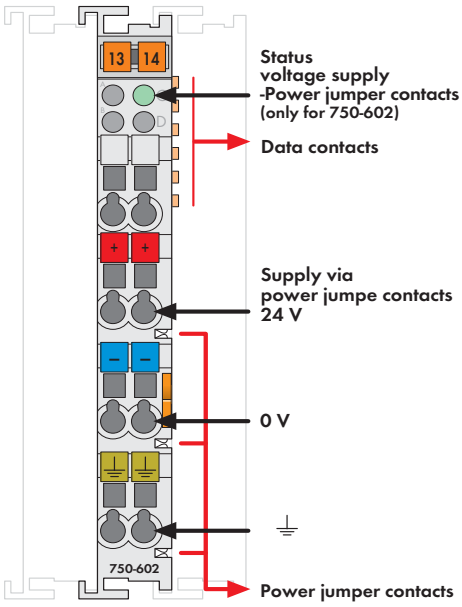

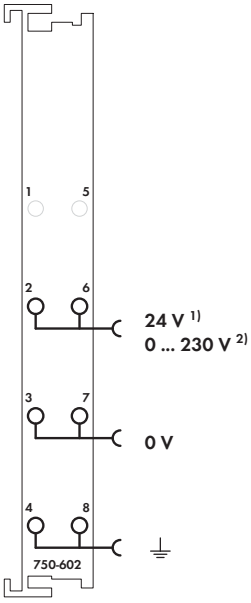

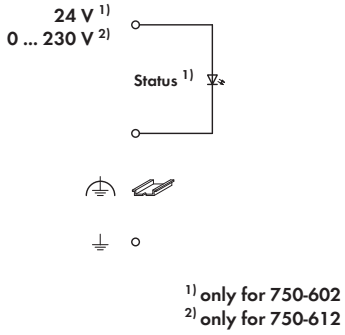

Delivered without miniature WSB markers

The supply module provides field side power through the power jumper contacts.

Maximum available supply current to all connected modules is 10A.

Should higher currents be necessary, intermediate supply modules must be added to the assembly. Supply modules may also be used to change the supply voltage to certain I/O modules within the assembly - on one fieldbus node.

Description	Item No.	Pack. Unit
24V DC Power Supply	**750-602**	1
24V DC Power Supply/T	**750-602/025-000**	1
Extended temperature range: -20 °C ... +60 °C		
0-230V AC/DC Power Supply	**750-612**	1
24V DC Power Supply (without connector)	**753-602**	1
0-230V AC/DC Power Supply (without connector)	**753-612**	1

Accessories		Item No.	Pack. Unit
	753 Series Connectors	**753-110**	25
	Coding elements	**753-150**	100
	Miniature WSB Quick marking system		
	plain	**248-501**	5
	with marking	see Section 11	

Approvals	
Conformity marking	CE
Korea Certification	K
Marine applications (versions upon request)	ABS, BV[1], DNV, GL, KR, LR[1], NKK, PRS, RINA
UL 508	
ANSI/ISA 12.12.01	Class I, Div. 2, Grp. ABCD, T4
TÜV 07 ATEX 554086 X	I M2 Ex d I Mb,
	II 3 G Ex nA IIC T4 Gc,
	II 3 D Ex tc IIIC T135°C Dc
IECEx TUN 09.0001 X	Ex d I Mb,
	Ex nA IIC T4 Gc,
	Ex tc IIIC T135°C Dc

[1] Does not apply to 753-602, -612

Technical Data	
Voltage via power jumper contacts (max.)	24 V DC (750-602 / 753-602)
	0 V ... 230 V AC/DC
	(750-612 / 753-612)
Current via power jumper contacts (max.)	10 A DC
Wire connection	CAGE CLAMP®
Cross sections	0.08 mm² ... 2.5 mm² / AWG 28 ... 14
Strip lengths	8 ... 9 mm / 0.33 in
	9 ... 10 mm / 0.37 in
Width	12 mm
Weight	44.2 g
EMC immunity of interference	acc. to EN 61000-6-2, marine applications
EMC emission of interference	acc. to EN 61000-6-4, marine applications

Downloaded from Arrow.com.