FEMALE PLUG M12 STRAIGHT PNP LED / MALE PLUG M12 STRAIGHT

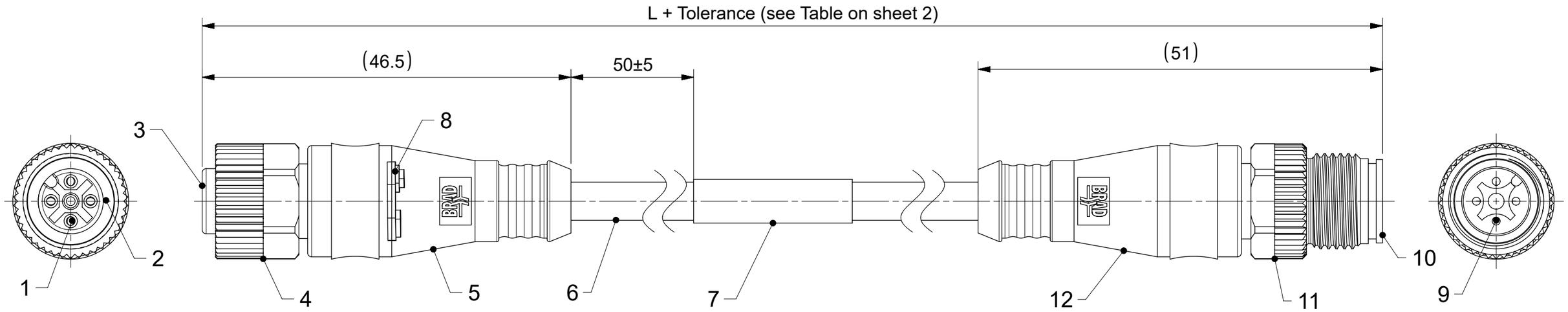

NOTES:
ELECTRICAL DATA :
VOLTAGE RATING : 10-30V DC
AMPERAGE RATING : 4A
INSULATION RESISTANCE : $10^8\Omega$ MIN
MATING CYCLES : MIN. 100
ENVIRONMENTAL :
PROTECTION : IP67 in mated and locked position
OPERATING TEMPERATURE : REFER CABLE LIST

BILL OF MATERIALS

ITEM	QTY.	DESCRIPTION	MATERIAL	FINISH
1	4	CONTACT M12 FEMALE	Cu ALLOY	SELECTIVE GOLD OVER NICKEL
2	1	ORING	FPM	RED
3	1	INSERT FEMALE	PUR	BLACK
4	1	COUPLING NUT FEMALE	BRASS	NICKEL
5	-	OVERMOULD	TPU	TRANSPARENT
6	-	CABLE	SEE SHEET 2	---
7	1	LABEL	VINYL	YELLOW
8	1	PCB PNP	---	---
9	4	CONTACT M12 MALE	Cu ALLOY	SELECTIVE GOLD OVER NICKEL
10	1	INSERT MALE	PUR	BLACK
11	1	COUPLING NUT MALE	BRASS	NICKEL
12	-	OVERMOULD	TPU	BLACK

CONTACT POSITION FRONT VIEW:

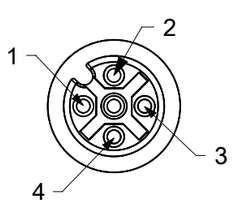

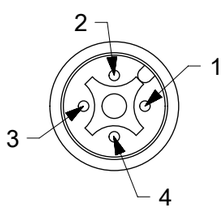

4 POLES FEMALE		4 POLES MALE	
PIN	WIRE	PIN	WIRE
1	BROWN	1	BROWN
2	WHITE	2	WHITE
3	BLUE	3	BLUE
4	BLACK	4	BLACK
5	-	5	-

CODING REQUIRED TO IEC 61076-2-101

PNP WIRING

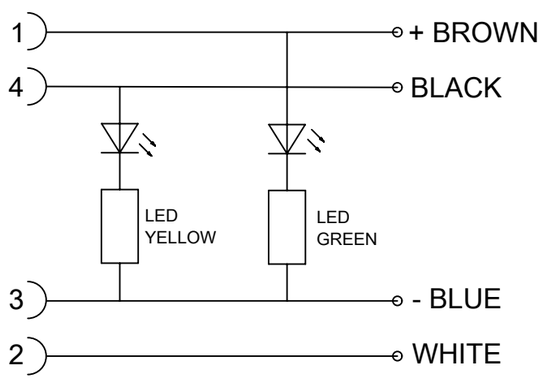

DOCUMENT STATUS	P1	RELEASE DATE	2024/07/02 09:18:11

THIS DRAWING CONTAINS INFORMATION THAT IS PROPRIETARY TO MOLEX ELECTRONIC TECHNOLOGIES, LLC AND SHOULD NOT BE USED WITHOUT WRITTEN PERMISSION

FUNCTIONAL SYMBOLS: FA = 0, FC = 0, FP = 0
DIVISIONAL SYMBOLS

DIMENSION UNITS	SCALE
mm	2:1

GENERAL TOLERANCES (UNLESS SPECIFIED)

ANGULAR TOL	±	1.0 °
4 PLACES	±	
3 PLACES	±	
2 PLACES	±	0.05
1 PLACE	±	0.1
0 PLACES	±	0.2

DRAFT WHERE APPLICABLE MUST REMAIN WITHIN DIMENSIONS

CURRENT REV DESC: AS PER THE PCN-513749 CHANGED DIMENSIONING STYLE OF OVERALL LENGTH TO "END TO END". ADDED NOTES. SORTED PART LIST USING CABLE TYPES ON SHEET 2

EC NO: 789428
DRWN: AKABADI 2023/08/09
CHK'D: RSILLER 2024/07/02
APPR: RSILLER 2024/07/02

INITIAL REVISION:
DRWN: APAWLAK01 2016/05/16
APPR: MIWASIECZKO 2016/05/20

molex

CSE M12 PNP 4P AC FE STR WSOR MA STR XM

PRODUCT CUSTOMER DRAWING

THIRD ANGLE PROJECTION	DRAWING	SERIES	MATERIAL NUMBER	CUSTOMER	SHEET NUMBER
	A3-SIZE	120067	SEE PART LIST	GENERAL MARKET	1 OF 2

DOCUMENT NUMBER	DOC TYPE	DOC PART	REVISION
1200678423	PSD	000	B

FORMAT: master-tb-prod-A3
REVISION: J1
DATE: 2021/05/01

ENGINEERING NO. - NUMERICAL CODE (Available parts see PART LIST table. Others on request).

8	8	4	0	P	6	B	3	X	X	X	X	X	X	X
													OPTIONS	

- 88 = M12x1 Double ended
- Poles: 4 = 4 Poles
- Heads style: 0P6 = Female Straight PNP LED / Male Straight
- Cable: B30 = 0.34mm² TPU Black; B36 = 0.34mm² TPU Orange
- Units: M = Meter
- Length Examples: 005 = 0.5 m; 010 = 1 m; 020 = 2 m; 050 = 5 m; 100 = 10 m; 150 = 15 m; 200 = 20 m
- Special: H=2pcs. of I/D Carrier Coupling Nut: Blank= KNU/HEX, 7=Teflon KNU; Overmould: Blank= Black, A=Grey, Y=Yellow

CABLE LIST

CABLE TYPE	NO. OF WIRES	CROSS SECTION	CABLE JACKET	UL	CSA	STATIC: TEMP. / BENDING RADIUS	DYNAMIC: TEMP. / BENDING RADIUS	DRAG CHAIN	SHIELD
B30	4	0.34mm²	TPU BLACK	UL STYLE 21215	YES	-40°C to +90°C, 5xD	-25°C to +80°C, 7.5xD	-	-
B36	4	0.34mm²	TPU ORANGE	UL STYLE 21215	YES	-40°C to +90°C, 5xD	-25°C to +80°C, 7.5xD	-	-

PART LIST

MOLEX PN	ENGINEERING No	L [mm]
4P CABLE B30		
1200678423	8840P6B30M010	1000
1200678424	8840P6B30M020	2000
1200678478	8840P6B30M030	3000
1200678425	8840P6B30M050	5000
1200678426	8840P6B30M100	10000
4P CABLE B36		
1200678489	8840P6B36M0107Y	1000
1200678490	8840P6B36M0207Y	2000
1200678491	8840P6B36M0307Y	3000
1200678492	8840P6B36M0507Y	5000
1200678493	8840P6B36M1007Y	10000
1200678494	8840P6B36M1507Y	15000
1200678495	8840P6B36M2007Y	20000

CABLE LENGTH TOLERANCES

LENGTH	TOLERANCE
0m-1m	+40 mm
>1m-5m	+60 mm
>5m-10m	+80 mm
>10m-20m	+140 mm
>20m-30m	+160 mm
>30m	+1% length

THIS DRAWING CONTAINS INFORMATION THAT IS PROPRIETARY TO MOLEX ELECTRONIC TECHNOLOGIES, LLC AND SHOULD NOT BE USED WITHOUT WRITTEN PERMISSION

FUNCTIONAL SYMBOLS: FA = 0, FC = 0, FP = 0
DIVISIONAL SYMBOLS

DIMENSION UNITS	SCALE
mm	1:1

GENERAL TOLERANCES (UNLESS SPECIFIED)

ANGULAR TOL	±	1.0 °
4 PLACES	±	
3 PLACES	±	
2 PLACES	±	0.05
1 PLACE	±	0.1
0 PLACES	±	0.2

DRAFT WHERE APPLICABLE MUST REMAIN WITHIN DIMENSIONS

CURRENT REV DESC: AS PER THE PCN-513749 CHANGED DIMENSIONING STYLE OF OVERALL LENGTH TO "END TO END". ADDED NOTES. SORTED PART LIST USING CABLE TYPES ON SHEET 2

EC NO: 789428
DRWN: AKABADI 2023/08/09
CHK'D: RSILLER 2024/07/02
APPR: RSILLER 2024/07/02

INITIAL REVISION:
DRWN: APAWLAK01 2016/05/16
APPR: MIWASIECZKO 2016/05/20

THIRD ANGLE PROJECTION | DRAWING: A3-SIZE | SERIES: 120067

molex

CSE M12 PNP 4P AC FE STR WSOR MA STR XM

PRODUCT CUSTOMER DRAWING

DOCUMENT NUMBER	DOC TYPE	DOC PART	REVISION
1200678423	PSD	000	B

MATERIAL NUMBER	CUSTOMER	SHEET NUMBER
SEE PART LIST	GENERAL MARKET	2 OF 2

DOCUMENT STATUS	P1	RELEASE DATE	2024/07/02	09:18:11

FORMAT: master-tb-prod-A3
REVISION: J1
DATE: 2021/05/01